Homework Helpers

# Grade 7
# Module 3

# G7-M3-Lesson 1: Generating Equivalent Expressions

1. Write an equivalent expression by combining like terms. Verify the equivalence of your expression and the given expression by evaluating each for the given value: $m = -3$.

$4m + 7 + m - 9$

$4m + 1m + 7 - 9$

$5m - 2$

I can rearrange the terms so that I have like terms together. I can also place a 1 in front of the $m$ to make it easier to add $4m + m$.

Next, I will replace all of the $m$'s in the original expression and the new expression with $-3$ and evaluate to see if I get the same result.

*Check:*

$4(-3) + 7 + (-3) - 9$

$-12 + 7 + (-3) + (-9)$

$-17$

$5(-3) - 2$

$-15 + (-2)$

$-17$

*The expressions $4m + 7 + m - 9$ and $5m - 2$ are equivalent.*

2. Use any order and any grouping to write an equivalent expression by combining like terms. Then, verify the equivalence of your expression to the given expression by evaluating for the value(s) given.

$9(2j) + 6(-7k) + 6(-j)$; for $j = \frac{1}{2}$, $k = \frac{1}{3}$

$9(2j) + 6(-7k) + 6(-j)$

$(9)(2)(j) + (6)(-7)(k) + (6)(-1)(j)$

$18j + (-42k) + (-6j)$

$18j + (-6j) + (-42k)$

$12j - 42k$

I can multiply in any order, which means I can multiply the 9 and 2 together first for the term $9(2j)$.

*Check:*

$9(2j) + 6(-7k) + 6(-j)$

$9\left(2 \times \frac{1}{2}\right) + 6\left(-7 \times \frac{1}{3}\right) + 6\left(-\frac{1}{2}\right)$

$9(1) + 6\left(-\frac{7}{3}\right) + (-3)$

$9 + \left(-\frac{42}{3}\right) + (-3)$

$9 + (-14) + (-3)$

$-8$

I evaluate both expressions using the given values for each variable. If I don't get the same result, I might have made an error somewhere in my work.

$12j - 42k$

$12\left(\frac{1}{2}\right) + (-42)\left(\frac{1}{3}\right)$

$6 + (-14)$

$-8$

I can go back to Module 2 for a review on how to work with signed rational numbers.

***Both expressions are equivalent.***

3. Meredith, Jodi, and Clive were finding the sum of $(5x + 8)$ and $-3x$. Meredith wrote the expression $2x + 8$, Jodi wrote $8x + 2$, and Clive wrote $8 + 2x$. Which person(s) was correct and why?

*Let* $x = 2$

$(5x + 8) + (-3x)$

$5(2) + 8 + (-3(2))$

$10 + 8 + (-6)$

$12$

I could test the equivalence by picking any value for $x$ and evaluating each expression.

*Meredith*

$2x + 8$

$2(2) + 8$

$4 + 8$

$12$

I will replace all the $x$'s in the original expression and the three possible expressions to see if I get the same result.

*Jodi*

$8x + 2$

$8(2) + 2$

$16 + 2$

$18$

Jodi's expression is the only one that did not result in 12 when I evaluated each expression.

*Clive*

$8 + 2x$

$8 + 2(2)$

$8 + 4$

$12$

*Meredith and Clive are correct. Their expressions are the same, just in different orders. Jodi's expression is incorrect.*

# G7-M3-Lesson 2: Generating Equivalent Expressions

1. Write each expression in standard form. Verify that your expression is equivalent to the one given by evaluating both expressions for the given value of the variable.

   a. $5x + (4x - 9); x = 3$

   $5x + 4x + (-9)$

   $9x + (-9)$

   $9x - 9$

   Because I am adding, I need to combine like terms.

   $5x + 4x = 9x$

   I can't combine $9x$ and $(-9)$ because they are not like terms.

   *Check:*

   | | |
   |---|---|
   | $5x + (4x - 9)$ | $9x - 9$ |
   | $5(3) + (4(3) - 9)$ | $9(3) - 9$ |
   | $15 + (12 - 9)$ | $27 - 9$ |
   | $15 + 3$ | $18$ |
   | $18$ | |

   To verify that the expressions are equivalent, I replace the $x$ in the original expression and the expression in standard form with a 3 and then evaluate. When I get the same thing for both expressions, I know that they are equivalent.

   *Both expressions are equivalent.*

   b. $7x - (4 - 2x); x = -5$

   $7x + \left(-(4 + (-2x))\right)$

   $7x + (-4) + 2x$

   $7x + 2x - 4$

   $9x - 4$

   The opposite of the sum can be written as the sum of the opposites.

   I can change subtraction to adding the opposite.

   *Check:*

   | | |
   |---|---|
   | $7x - (4 - 2x)$ | $9x - 4$ |
   | $7(-5) - (4 - 2(-5))$ | $9(-5) - 4$ |
   | $-35 - (4 + 10)$ | $-45 - 4$ |
   | $-35 - (14)$ | $-45 + (-4)$ |
   | $-35 + (-14)$ | $-49$ |
   | $-49$ | |

   I can look back to Module 2 for help with order of operations and integers.

   *These expressions are equivalent.*

c. $(11g + 7h - 8) - (3g - 9h + 6)$; $g = -3$ and $h = 4$

$(11g + 7h - 8) + (-(3g + (-9h) + 6))$

$(11g + 7h - 8) + (-3g + 9h - 6)$

$11g + (-3g) + 7h + 9h + (-8) + (-6)$

$8g + 16h + (-14)$

$8g + 16h - 14$

Even though there are two variables, I can still write the expression in standard form by combining like terms.

This expression is in standard form because none of the terms are like terms.

I need to be careful here and use $-3$ for $g$ and 4 for $h$. If I put the numbers in the wrong spots, my solution will be incorrect.

*Check:*

$(11g + 7h - 8) - (3g - 9h + 6)$

$\big(11(-3) + 7(4) + (-8)\big) - \big(3(-3) + \big(-9(4)\big) + 6\big)$

$\big(-33 + 28 + (-8)\big) - (-9 + (-36) + 6)$

$\big(-5 + (-8)\big) - (-45 + 6)$

$-13 - (-39)$

$-13 + 39$

$26$

$8g + 16h - 14$

$8(-3) + 16(4) + (-14)$

$-24 + 64 + (-14)$

$40 + (-14)$

$26$

***The expressions are equivalent.***

I can use the same properties when I am verifying that the expressions are equivalent as I did when I was simplifying.

d. $-3(8v) + 2y(15);\ v = \frac{1}{4};\ y = \frac{2}{3}$

$(-3)(8)v + 2(15)y$

$-24v + 30y$

I can multiply in any order. So $2y(15)$ could also be $2(15)y$, giving me $30y$.

*Check:*

| | |
|---|---|
| $-3(8v) + 2y(15)$ | $-24v + 30y$ |
| $-3\left(8\left(\frac{1}{4}\right)\right) + 2\left(\frac{2}{3}\right)(15)$ | $-24\left(\frac{1}{4}\right) + 30\left(\frac{2}{3}\right)$ |
| $-3(2) + 2(10)$ | $-6 + 20$ |
| $-6 + 20$ | $14$ |
| $14$ | |

*The expressions are equivalent.*

e. $32xy \div 8y;\ x = -\frac{1}{2};\ y = 3$

$32xy \times \left(\frac{1}{8y}\right)$

Dividing is equivalent to multiplying by the reciprocal. So I can rewrite this problem as a multiplication expression.

$\frac{32xy}{8y}$

$\frac{32}{8} \cdot \frac{x}{1} \cdot \frac{y}{y}$

$4x$

I can use the "any order, any grouping" property in order to break apart the factors and simplify.

*Check:*

| | |
|---|---|
| $32xy \div 8y$ | $4x$ |
| $32\left(-\frac{1}{2}\right)(3) \div 8(3)$ | $4\left(-\frac{1}{2}\right)$ |
| $-48 \div 24$ | $-2$ |
| $-2$ | |

*The expressions are equivalent.*

2. Doug and Romel are placing apples in baskets to sell at the farm stand. They are putting $x$ apples in each basket. When they are finished, Doug has 23 full baskets and has 7 extra apples, and Romel has 19 full baskets and has 3 extra apples. Write an expression in standard form that represents the number of apples the boys started with. Explain what your expression means.

I can represent the number of apples Doug had with the expression $23x + 7$ because he put $x$ apples in 23 baskets.

For Romel, I will use $19x + 3$ because he filled 19 baskets with $x$ apples each. Now I need to add together the number of apples each boy had.

$$23x + 7 + 19x + 3$$

$$23x + 19x + 7 + 3$$

$$42x + 10$$

*This means that altogether they have 42 baskets with $x$ apples in each, plus another 10 leftover apples.*

3. The area of the pictured rectangle below is $36h$ ft$^2$. Its width is $4h$ ft. Find the height of the rectangle, and name any properties used with the appropriate step.

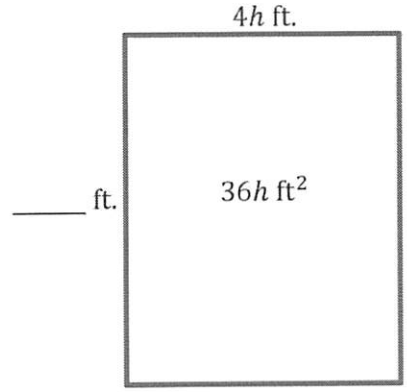


I was given the area and the width, so I need to divide to find the height.

$$36h \div 4h$$

*Multiplying by the reciprocal* $\quad 36h \times \frac{1}{4h}$

*Multiplication* $\quad \frac{36h}{4h}$

*Any order, any grouping* $\quad \frac{36}{4} \cdot \frac{h}{h}$

$$9 \cdot 1$$

$$9$$

*The height of the rectangle is 9 feet.*

I need to name the properties that I used with each step. I remember doing this in Lessons 8, 9, and 16 of Module 2 and can reference these lessons for some examples of how I did this before.

# G7-M3-Lesson 3: Writing Products as Sums and Sums as Products

1.

a. Write two equivalent expressions that represent the rectangular array below.

I know that area of a rectangle is length times width. So I can write an expression showing the length, $(7m + 2)$, times the width, 5.

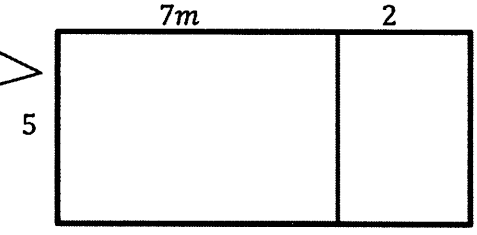


$5(7m + 2) = 35m + 10$

I can use the distributive property to rewrite my first expression. I just have to remember to multiply 5 times $7m$ and 5 times 2.

b. Verify informally that the two expressions are equivalent using substitution.

*Let* $m = 2$

| | |
|---|---|
| $5(7m + 2)$ | $35m + 10$ |
| $5(7(2) + 2)$ | $35(2) + 10$ |
| $5(14 + 2)$ | $70 + 10$ |
| $5(16)$ | $80$ |
| $80$ | |

To verify that these two expressions are equivalent, I can pick any value I want for $m$ and then substitute it into both expressions to make sure they both give me the same value, just like I did in Lesson 2.

c. Use a rectangular array to write the product $3(2h + 6g + 4k)$ in standard form.

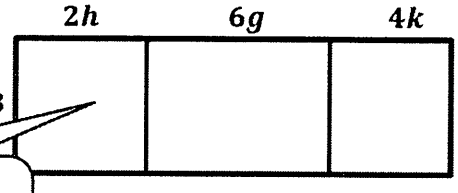


I draw an array where 3 is the width, and the length is $2h + 6g + 4k$.

$3(2h) + 3(6g) + 3(4k)$

$6h + 18g + 12k$

I multiply each part of the length by the width, 3.

*The expression in standard form is* $6h + 18g + 12k$.

2. Use the distributive property to write the products in standard form.

a. $(3m + 5n - 6p)4$

This problem is written a little differently than the others. It is still asking me to distribute the 4 to all terms inside the parentheses.

$$4(3m + 5n - 6p)$$
$$4(3m) + 4(5n) + 4(-6p)$$
$$12m + 20n - 24p$$

I can rewrite the problem with the 4 in the front if that makes it easier for me to simplify.

b. $(64h + 40g) \div 8$

I can rewrite the division as multiplication by the reciprocal.

$$\frac{1}{8}(64h + 40g)$$
$$\frac{1}{8}(64h) + \frac{1}{8}(40g)$$
$$\frac{64}{8}h + \frac{40}{8}g$$
$$8h + 5g$$

c. $7(4x - 1) + 3(5x + 9)$

I need to use the distributive property twice in this problem.

$$7(4x) + 7(-1) + 3(5x) + 3(9)$$
$$28x + (-7) + 15x + 27$$
$$28x + 15x + 27 + (-7)$$
$$43x + 20$$

I combine like terms after applying the distributive property.

3. You and your friend are in charge of buying supplies for the next school dance. Each package of balloons costs $\$2$, and each string of lights costs $\$8$. Write an equation that represents the total amount spent, $S$, if $b$ represents the number of packages of balloons purchased and $l$ represents the number of strings of lights purchased. Explain the equation in words.

$$S = 2b + 8l \quad \text{or} \quad S = 2(b + 4l)$$

I notice that the terms in the first equation have a common factor, which means I can write this equation a second way, by dividing out the common factor from each term and writing it outside the parentheses.

*The total amount spent can be determined by multiplying the number of packages of balloons purchased by two and then adding that to the product of the number of strings of lights and eight.*

*The total amount spent can also be determined by adding the number of packages of balloons purchased to four times the number of strings of lights purchased and then multiplying the sum by two.*

# G7-M3-Lesson 4: Writing Products as Sums and Sums as Products

I need to write my answer showing two expressions that are being multiplied together.

1. Write each expression as the product of two factors.

   a. $k \cdot 5 + m \cdot 5$

   $5(k + m)$

   I see that both of the addends have a common factor of 5. I can figure out what will still be inside of the parentheses by dividing both terms by 5.

   b. $(d + e) + (d + e) + (d + e) + (d + e)$

   $4(d + e)$

   I know that repeated addition can be written as multiplication.

   c. $4h + (8 + h) + 3 \cdot 4$

   $4h + 8 + h + 12$

   $5h + 20$

   $5(h + 4)$

   I must simplify this expression before I can try to write it as the product of two factors.

2. Write each expression in standard form.

   a. $-8(7y - 3z + 5)$

   $-8(7y) + (-8)(-3z) + (-8)(5)$

   $-56y + 24z - 40$

   To be in standard form, I need to rewrite this expression without the parentheses. I can distribute the $-8$ to all terms inside.

   b. $4 - 2(-8h - 3)$

   $4 + \left(-2(-8h - 3)\right)$

   $4 + (-2)(-8h) + (-2)(-3)$

   $4 + 16h + 6$

   $10 + 16h$

   I need to follow the correct order of operations, which means I need to distribute the $-2$ before I subtract.

3. Use the following rectangular array to answer the questions below.

The height is the greatest common factor of all three products. I determine the greatest common factor and then divide the products by the greatest common factor to determine the lengths.

| | $2j$ | $7k$ | $10m$ |
|---|---|---|---|
| $5$ | $10j$ | $35k$ | $50m$ |

a. Fill in the missing information.

b. Write the sum represented in the rectangular array.

$10j + 35k + 50m$

I can add the area of each section of the array to write the sum.

c. Use the missing information from part (a) to write the sum from part (b) as a product of two factors.

$5(2j) + 5(7k) + 5(10m)$

$5(2j + 7k + 10m)$

I need to show that 5 is being multiplied by each length without having to write "times 5" three times.

4. Combine like terms to write each expression in standard form.

I know I can rewrite all of the subtraction as adding the opposite.

$$(-m - n) - (m - n)$$
$$-m + (-n) + (-(m - n))$$
$$-m + (-n) + (-m) + n$$
$$-m + (-m) + (-n) + n$$
$$-2m$$

In the end, I have to add opposites.

$(-n) + n = 0$

5. Kathy is a professional dog walker. She must walk the dogs 6 days a week. During each day of walking, she drinks 1 bottle of tea and 3 bottles of water. Let $t$ represent the ounces of tea she drinks and $w$ represent the ounces of water she drinks from each bottle of water. Write two different expressions that represent the total number of ounces Kathy drank in one week while walking the dogs. Explain how each expression describes the situation in a different way.

In one day, Kathy will drink $t$ ounces of tea and $w + w + w$ or $3w$ ounces of water from the three water bottles. That is $t + 3w$ ounces in one day.

$6(t + 3w)$

*Kathy drinks tea and water during walks on six different days, so the total ounces is six times the quantity of the water and tea that Kathy drank each day.*

$6(t) + 6(3w)$

$6t + 18w$

*There are 6 bottles of tea and 18 bottles of water total. The total amount that Kathy drank will be six times the ounces in one bottle of tea plus 18 times the ounces in one bottle of water.*

# G7-M3-Lesson 5: Using the Identity and Inverse to Write Equivalent Expressions

1. Fill in the missing parts.

   The product of $\frac{1}{3}g + 4$ and the multiplicative inverse of $\frac{1}{3}$

The first part has been set up for me, and it shows that 3 is the multiplicative inverse of $\frac{1}{3}$.

I see that the column on the left shows the steps, and the column on the right shows the properties that describe the steps.

| | |
|---|---|
| $\left(\frac{1}{3}g + 4\right)(3)$ | |
| $\frac{1}{3}g(3) + 4(3)$ | Distributive property |
| $1g + 12$ | *Multiplicative inverse; multiplication* |
| $g + 12$ | Multiplicative identity property of one |

Here, I can rewrite the expression without the 1 because $g$ and $1g$ are equivalent expressions.

2. Write the sum, and then rewrite the expression in standard form by removing parentheses and collecting like terms.

   a. 13 and $4w - 13$

   $13 + (4w - 13)$

   $13 + 4w + (-13)$

   $13 + (-13) + 4w$

   $4w$

I can rewrite subtraction as adding the opposite so that all terms are being added.

I use the additive inverse property, showing that a number and its inverse have a sum of 0.

   b. The opposite of $5m$ and $9 + 5m$

   $-5m + (9 + 5m)$

   $-5m + 5m + 9$

   $9$

Because this question says "the opposite of $5m$," I use the opposite sign, making the term $-5m$.

c. $7y$ and the opposite of $(3 - 8y)$

$7y + (-(3 - 8y))$

$7y + (-(3 + (-8y)))$

$7y + (-3) + (8y)$

$7y + 8y - 3$

$15y - 3$

I remember that the opposite of a sum is the same as the sum of its opposites.

3. Write the product, and then rewrite the expression in standard form by removing parentheses and collecting like terms.

The multiplicative inverse of $-8$ and $24g - 8$

A multiplicative inverse has the same sign of the given number but is the reciprocal.

$-\frac{1}{8}(24g - 8)$

$-\frac{1}{8}(24g + (-8))$

$-\frac{1}{8}(24g) + \left(-\frac{1}{8}\right)(-8)$

$-3g + 1$

When I multiply multiplicative inverses, I get 1.

4. Write the expression in standard form.

$\frac{5}{8}(7x + 4) + 2$

I only distribute the $\frac{5}{8}$ to the terms inside the parentheses.

$\frac{5}{8}(7x) + \frac{5}{8}(4) + 2$

$\frac{5}{8}\left(\frac{7}{1}\right)x + \left(\frac{5}{8}\right)\left(\frac{4}{1}\right) + 2$

$\frac{35}{8}x + \frac{20}{8} + 2$

$\frac{35}{8}x + \frac{5}{2} + \frac{4}{2}$

$\frac{35}{8}x + \frac{9}{2}$

I can rewrite the constant terms so they have common denominators in order to add like terms.

# G7-M3-Lesson 6: Collecting Rational Number Like Terms

1. Write the indicated expression.

a. $\frac{2}{5}k$ inches in yards

$\frac{2}{5}k \times \frac{1}{36}$

I know that there are 36 inches in a yard. That means that 1 inch is $\frac{1}{36}$ of a yard.

$\left(\frac{2}{5}\right)\left(\frac{1}{36}\right)k$

Multiplication is commutative, which means I can multiply in any order and still get the same answer.

$\frac{2}{180}k$

$\frac{1}{90}k$

*$\frac{2}{5}k$ inches is equal to $\frac{1}{90}k$ yards.*

b. The average speed of a bike rider that travels $3m$ miles in $\frac{5}{8}$ hour

$R = \frac{D}{T}$

I know that distance is equal to the rate multiplied by the time. I can write this formula so that I am solving for the rate instead.

$R = \frac{3m}{\frac{5}{8}}$

The complex fraction is really showing two values that are being divided.

$R = \frac{3m}{1} \div \frac{5}{8}$

$R = \frac{3m}{1} \times \frac{8}{5}$

$R = \frac{24m}{5}$

*The average speed of the bike rider is $\frac{24m}{5}$ miles per hour.*

2. Rewrite the expression by collecting like terms.

a. $\frac{b}{5} - \frac{3b}{4} + 2$

Before I can collect like terms, I need to get common denominators.

$\frac{4b}{20} - \frac{15b}{20} + 2$

$\frac{4b}{20} + \left(-\frac{15b}{20}\right) + 2$

$-\frac{11b}{20} + 2$

b. $\frac{2}{3}k - k - \frac{5}{6}k + \frac{4}{5} - \frac{3}{5}m + 3\frac{1}{10}m$

I must collect like terms by combining the terms with the same variable part. To do this, I need to find common denominators for each set of like terms.

$\frac{4}{6}k - \frac{6}{6}k - \frac{5}{6}k + \frac{4}{5} - \frac{6}{10}m + \frac{31}{10}m$

$-\frac{7}{6}k + \frac{25}{10}m + \frac{4}{5}$

Before I can collect like terms, I must apply the distributive property.

c. $\frac{2}{3}(g+5) - \frac{1}{4}(8g+1)$

$\frac{2}{3}(g) + \frac{2}{3}(5) + \left(-\frac{1}{4}\right)(8g) + \left(-\frac{1}{4}\right)(1)$

$\frac{2}{3}g + \frac{10}{3} + (-2g) + \left(-\frac{1}{4}\right)$

I can apply the commutative property to change the order so that the like terms are together.

$\frac{2}{3}g + (-2g) + \frac{10}{3} + \left(-\frac{1}{4}\right)$

$\frac{2}{3}g + \left(-\frac{6}{3}g\right) + \frac{40}{12} + \left(-\frac{3}{12}\right)$

$-\frac{4}{3}g + \frac{37}{12}$

d. $\frac{5y}{3} + \frac{2y+1}{4} - \frac{y-7}{2}$

$\frac{5y}{3} + \frac{2y+1}{4} + \left(-\left(\frac{y-7}{2}\right)\right)$

I remember that the opposite of a sum is the same as the sum of its opposites.

$\frac{5y}{3} + \frac{2y+1}{4} + \frac{-y+7}{2}$

$\frac{4(5y)}{4(3)} + \frac{3(2y+1)}{3(4)} + \frac{6(-y+7)}{6(2)}$

$\frac{20y}{12} + \frac{6y+3}{12} + \frac{-6y+42}{12}$

Getting common denominators will make it easier to collect the like terms in the numerator.

$\frac{20y + 6y - 6y + 3 + 42}{12}$

$\frac{20y+45}{12}$

Or, I could write my answer as $\frac{5y}{3} + \frac{15}{4}$.





EUREKA MATH

# G7-M3-Lesson 7: Understanding Equations

1. Check whether the given value of $h$ is a solution to the equation. Justify your answer.

$$4(2h-3) = 6 + 2h \qquad h = 3$$

I need to replace all of the $h$'s with 3 and evaluate each side of the equation.

$$4(2(3)-3) = 6 + 2(3)$$
$$4(6-3) = 6 + 6$$
$$4(3) = 12$$
$$12 = 12$$

Because both expressions are equal to 12 when $h = 3$, I know that $h = 3$ is a solution to the equation. If the value of each expression were not equal, I would know that the number substituted in for $h$ was not a solution.

Felix is trying to create a number puzzle for his friend to solve. He challenges his friend to find the mystery number. "When 8 is added to one-third of a number, the result is $-2$." The equation to represent the mystery number is $\frac{1}{3}x + 8 = -2$. Felix's friend tries to guess the mystery number. Her first guess is $-18$. Is she correct? Why or why not?

$$\frac{1}{3}x + 8 = -2$$
$$\frac{1}{3}(-18) + 8 = -2$$
$$\frac{1}{3}\left(-\frac{18}{1}\right) + 8 = -2$$
$$-\frac{18}{3} + 8 = -2$$
$$-6 + 8 = -2$$
$$2 = -2$$

*False*

If I cannot remember how to work with integers, I can go back to the beginning of Module 2 for help.

I know that 2 and $-2$ are opposites, which means they are not equal. So, this is not a true statement.

*She is not correct. The number $-18$ will not make a true statement. Therefore, it cannot be a solution.*

2. The sum of three consecutive integers is 57.

Consecutive means that the numbers follow each other in order, like 4, 5, 6.

a. Find the smallest integer using a tape diagram.

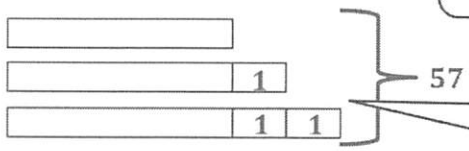


I need to show that each number is one bigger than the number before it.

After I subtract the "1" pieces, I am left with 3 equal sized unknown pieces, so I divide by 3 to determine the size of each unknown piece.

$57 - 3 = 54$

$54 \div 3 = 18$

*The smallest integer would be* $18$.

b. Let $x$ represent the smallest integer. Write an equation that can be used to find the smallest integer.

*Smallest integer:* $x$

*2nd integer:* $(x + 1)$

*3rd integer:* $(x + 2)$

I can use my tape diagram to help me set up expressions for each of the consecutive integers.

*Sum of the three consecutive integers:* $x + (x + 1) + (x + 2)$

*Equation:* $x + (x + 1) + (x + 2) = 57$

Next, I need to show that when I add all of the integers together, I get 57.

c. Will 18 also be a solution to the equation in part (b)?

I will replace $x$ with 18 and test it out.

$$x + (x + 1) + (x + 2) = 57$$
$$18 + (18 + 1) + (18 + 2) = 57$$
$$18 + 19 + 20 = 57$$
$$57 = 57$$

Here, I can see that I am finding the sum of three consecutive numbers, 18, 19, and 20.

*Yes,* $18$ *is also a solution to the equation.*





EUREKA MATH

# G7-M3-Lesson 8: Using If-Then Moves in Solving Equations

1. Four times the sum of three consecutive odd integers is $-84$. Find the integers.

Consecutive odd integers would be like $1, 3, 5, \ldots$. Each number is 2 more than the one before.

*Let $n$ represent the first odd integer; then $n+2$ and $n+4$ represent the next two consecutive odd integers.*

$$4(n+(n+2)+(n+4)) = -84$$
$$4(3n+6) = -84$$
$$12n+24 = -84$$
$$12n+24-24 = -84-24$$
$$12n = -108$$
$$n = -9$$

I need to collect like terms and use the distributive property when solving.

I can go back to the expressions for each integer and substitute in the $-9$ for the value of $n$ to determine the other consecutive integers.

$$-9+2 = -7$$
$$-9+4 = -5$$

*The integers are $-9$, $-7$, and $-5$.*

2. A number is 11 greater than $\frac{2}{3}$ another number. If the sum of the numbers is 31, find the numbers.

I only want to use one variable, so I need to write an expression for the first number based on how it is related to the other number.

*Let $n$ represent a number; then $\frac{2}{3}n + 11$ represents the other number.*

Rewriting some of the terms in equivalent forms, like $n$ as $\frac{3}{3}n$, will make it easier to collect like terms.

$$n + \left(\frac{2}{3}n + 11\right) = 31$$
$$\left(n + \frac{2}{3}n\right) + 11 = 31$$
$$\left(\frac{3}{3}n + \frac{2}{3}n\right) + 11 = 31$$
$$\frac{5}{3}n + 11 = 31$$
$$\frac{5}{3}n + 11 - 11 = 31 - 11$$
$$\frac{5}{3}n + 0 = 20$$
$$\frac{5}{3}n = 20$$
$$\frac{3}{5} \cdot \frac{5}{3}n = \frac{3}{5} \cdot 20$$
$$1n = 3 \cdot 4$$
$$n = 12$$

*Since the numbers sum to 31, they are 12 and 19.*





EUREKA MATH

3. Lukas filled 6.5 more boxes than Charlotte, and Xin filled 8 fewer than Lukas. Together, they filled 50 boxes. How many boxes did each person fill?

There are three different people mentioned here. Lukas is being compared to Charlotte, but I don't know anything about how many Charlotte filled, so I will call it $n$.

*Let $n$ represent the number of boxes Charlotte filled.*

*Then, $(n + 6.5)$ will represent the number of boxes Lukas filled.*

*And $((n + 6.5) - 8)$ or $(n - 1.5)$ will represent the number of boxes Xin filled.*

Simplifying the expression for Xin now will make it easier to work with later.

$$\begin{aligned} n + (n + 6.5) + (n - 1.5) &= 50 \\ n + n + n + 6.5 - 1.5 &= 50 \\ 3n + 5 &= 50 \\ 3n + 5 - 5 &= 50 - 5 \\ 3n &= 45 \\ \left(\frac{1}{3}\right)(3n) &= \left(\frac{1}{3}\right)(45) \\ n &= 15 \end{aligned}$$

The equation I write should be Charlotte's expression + Lukas' expression + Xin's expression = 50. Then I replace the people's names with expressions that represent how many boxes they filled.

$15 + 6.5 = 21.5$

$15 - 1.5 = 13.5$

$15 + 21.5 + 13.5 = 50$

*If the total number of boxes filled was 50, then Charlotte filled 15 boxes, Lukas filled 21.5 boxes, and Xin filled 13.5 boxes.*

4. A preschool teacher plans her class to include 30 minutes on the playground, $\frac{1}{4}$ of the daily class time on a craft/project, and the remaining practice time working on skills, reading, and math. The teacher planned 75 minutes for the playground and craft/project time. How long, in hours, is a day of preschool?

*The duration of the entire preschool day: $x$ hours*

The problem says to give the time in hours. I know that there are 60 minutes in an hour. I can write the minutes given in terms of hours by placing them in a fraction with 60 in the denominator.

I can simplify fractions to have common denominators to make it easier to collect the like terms.

$$\frac{1}{4}x + \frac{30}{60} = \frac{75}{60}$$

$$\frac{1}{4}x + \frac{2}{4} = \frac{5}{4}$$

$$\frac{1}{4}x + \frac{2}{4} - \frac{2}{4} = \frac{5}{4} - \frac{2}{4}$$

$$\frac{1}{4}x = \frac{3}{4}$$

$$\left(\frac{4}{1}\right)\left(\frac{1}{4}x\right) = \frac{3}{4}\left(\frac{4}{1}\right)$$

$$x = \frac{12}{4}$$

$$x = 3$$

*Preschool is 3 hours long each day.*





EUREKA MATH

# G7-M3-Lesson 9: Using If-Then Moves in Solving Equations

1. Holly's grandfather is 52 years older than her. In 7 years, the sum of their ages will be 70. Find Holly's present age.

   *Let $x$ represents Holly's age now in years.*

| | *Now* | *7 years later* |
|---|---|---|
| *Holly* | $x$ | $x+7$ |
| *Grandfather* | $x+52$ | $(x+52)+7$ |

The question mentions now and 7 years later. I can make a table to organize the information provided to help me create an equation to model the situation.

$$x+7+x+52+7=70$$
$$x+x+7+52+7=70$$
$$2x+66=70$$
$$2x+66-66=70-66$$
$$2x=4$$
$$\left(\frac{1}{2}\right)(2x)=\left(\frac{1}{2}\right)(4)$$
$$x=2$$

I was given the sum after 7 years, so I will use the third column in the table to form the equation.

*Holly's present age is 2 years old.*

2. The sum of two numbers is 63, and their difference is 7. Find the numbers.

*Let $x$ represent one of the two numbers.*

*Let $63 - x$ represent the other number.*

This question tells me about the sum and the difference. I use the sum to set up the "let" statements and the difference to write the equation that models the situation.

If two numbers have a sum of 63, and I take one number away from 63, I will get the other number. I can check this by adding them together.

$$x + (63 - x) = x - x + 63 = 63$$

$$\begin{aligned} x - (63 - x) &= 7 \\ x + \big(-(63 - x)\big) &= 7 \\ x + (-63 + x) &= 7 \\ x + (-63) + x &= 7 \\ 2x - 63 &= 7 \\ 2x - 63 + 63 &= 7 + 63 \\ 2x &= 70 \\ \left(\frac{1}{2}\right)(2x) &= \left(\frac{1}{2}\right)(70) \\ x &= 35 \end{aligned}$$

$63 - 35 = 28$

*The numbers are 35 and 28.*





EUREKA MATH

3. Carmen is planning a party to introduce people to her new products for sale. She bought 500 gifts bags to hold party favors and 500 business cards. Each gift bag costs 57 cents more than each business card. If Carmen's total order costs \$315, find the cost of each gift bag and business card.

This question gives money in cents and money in dollars, but I need common units, so I write both of the amounts in dollars.

*Let $b$ represent the cost of a business card.*

*Then, the cost of a gift bag in dollars is $b + 0.57$.*

Because she bought 500 of both items, I can use the distributive property to write this equation.

$$500(b + b + 0.57) = 315$$
$$500(2b + 0.57) = 315$$
$$1,000b + 285 = 315$$
$$1,000b + 285 - 285 = 315 - 285$$
$$1,000b = 30$$
$$\left(\frac{1}{1,000}\right)(1,000b) = \left(\frac{1}{1,000}\right)(30)$$
$$b = 0.03$$

Because this question deals with money, it will be helpful to convert from fraction to decimal.

$0.03 + 0.57 = 0.60$

*A business card costs \$0.03, and a gift bag costs \$0.60.*

4. A group of friends left for vacation in two vehicles at the same time. One car traveled an average speed of 4 miles per hour faster than the other. When the first car arrived at the destination after $8\frac{1}{4}$ hours of driving, both cars had driven a total of 1,006.5 miles. If the second car continues at the same average speed, how much time, to the nearest minute, will it take before the second car arrives?

The 1,006.5 miles doesn't represent the total miles driven for the whole trip. Instead, this is the amount that both cars drove in $8\frac{1}{4}$ hours. The second car hasn't arrived at the destination yet.

***Let $r$ represent the speed in miles per hour of the faster car; then $r - 4$ represents the speed in miles per hour of the slower car.***

I can use the formula distance = rate × time to help me set up an equation for this problem. This will first help me to determine how fast each vehicle was going.

$$8\frac{1}{4}(r) + 8\frac{1}{4}(r-4) = 1,006.5$$
$$8\frac{1}{4}(r + r - 4) = 1,006.5$$
$$8\frac{1}{4}(2r - 4) = 1,006.5$$
$$\frac{33}{4}(2r - 4) = 1,006.5$$
$$\frac{4}{33}\cdot\frac{33}{4}(2r-4) = \frac{4}{33}\cdot 1,006.5$$
$$2r - 4 = 122$$
$$2r - 4 + 4 = 122 + 4$$
$$2r = 126$$
$$\left(\frac{1}{2}\right)(2r) = \left(\frac{1}{2}\right)(126)$$
$$r = 63$$

I can think of 1,006.5 as $\frac{1,006.5}{1}$ so that I can multiply the two factors.

***The average speed of the faster car is 63 miles per hour, so the average speed of the slower car is 59 miles per hour.***

$$d = 59 \cdot 8\frac{1}{4}$$
$$d = 59 \cdot \frac{33}{4}$$
$$d = 486.75$$

*The slower car traveled* $486.75$ *miles in* $8\frac{1}{4}$ *hours.*

$1,006.5 - 486.75 = 519.75$

*The faster car traveled* $519.75$ *miles in* $8\frac{1}{4}$ *hours.*

*The slower car traveled* $486.75$ *miles in* $8\frac{1}{4}$ *hours.*

*The remainder of the slower car's trip is* $33$ *miles because* $519.75 - 486.75 = 33$.

Now that I know the rate and distance the second car still needs to travel, I can use $d = rt$ again to solve for the time.

$$33 = 59\,(t)$$

$$\frac{1}{59}(33) = \frac{1}{59}(59)(t)$$

$$\frac{33}{59} = t$$

*This time is in hours. To convert to minutes, multiply by* $60$ *because there are* $60$ *minutes in an hour.*

$$\frac{33}{59} \cdot 60 = \frac{1980}{59} \approx 34$$

*The slower car will arrive approximately* $34$ *minutes after the faster car.*

5. Lucien bought a certain brand of fertilizer for his garden at a unit price of \$1.25 per pound. The total cost of the fertilizer left him with \$5. He wanted to buy the same weight of a better brand of fertilizer, but at \$2.10 per pound, he would have been \$80 short of the total amount due. How much money did Lucien have to buy fertilizer?

From the word problem, I can determine the difference in how much money is left between buying the cheaper or the more expensive product.

$$5 - (-80) = 5 + 80 = 85.$$

*The difference in the costs is* $\$85.00$ *for the same weight in fertilizer.*

*Let w represent the weight in pounds of fertilizer.*

$$\begin{aligned} 2.10w - 1.25w &= 85 \\ 0.85w &= 85 \\ \frac{85}{100}w &= 85 \\ \frac{100}{85} \cdot \frac{85}{100}w &= 85 \cdot \frac{100}{85} \\ 1w &= 100 \\ w &= 100 \end{aligned}$$

I can use the difference in the price per pound with the difference in the amount of money Lucien will have to help me determine how much was bought.

*Lucien bought* $100$ *pounds of fertilizer.*

$$\begin{aligned} \text{Cost} &= \text{unit price} \cdot \text{weight} \\ \text{Cost} &= (\$1.25 \text{ per pound}) \cdot (100 \text{ pounds}) \\ \text{Cost} &= \$125.00 \end{aligned}$$

*Lucien paid* $\$125$ *for* $100$ *pounds of fertilizer. Lucien had* $\$5$ *left after his purchase, so he started with* $\$125 + \$5 = \$130$.

If he would have had \$5 left after paying, I need to add that to the \$125 he paid for the fertilizer to determine how much he started with.

# G7-M3-Lesson 10: Angle Problems and Solving Equations

For each question, use angle relationships to write an equation in order to solve for each variable. Determine the indicated angles.

1. In a complete sentence, describe the relevant angle relationships in the following diagram. Find the measurements of $\angle ABE$ and $\angle EBD$.

   ***$\angle ABE$, $\angle EBD$, and $\angle DBC$ are angles on a line and their measures sum to $180°$.***

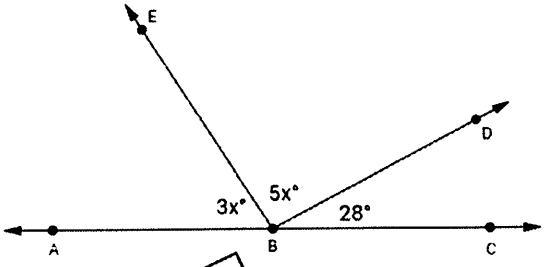


$$3x + 5x + 28 = 180$$
$$8x + 28 = 180$$
$$8x + 28 - 28 = 180 - 28$$
$$8x = 152$$
$$\left(\frac{1}{8}\right)8x = \left(\frac{1}{8}\right)152$$
$$x = 19$$

I can see that all three of these angles form a straight line, which means the sum of these three angles must be 180°.

$$m\angle ABE = 3(19°) = 57°$$
$$m\angle EBD = 5(19°) = 95°$$

Finding the value of $x$ is not the answer. I need to go one step further and plug $x$ back into the expressions and evaluate to determine the measure of each angle.

2. In a complete sentence, describe the relevant angle relationships in the following diagram. Find the measurement of $\angle WSV$.

I can see that $\angle WSV$ and $\angle ZSY$ are formed by the same two lines. So they are vertical angles and are congruent. That means $m\angle WSV$ must also be $3x°$.

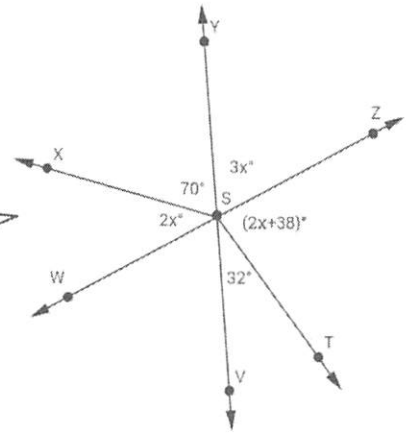


*All of the angles in the diagram are angles at a point, and their measures sum to $360°$. $\angle ZSY$ and $\angle WSV$ are vertical angles and are of equal measurement.*

I need to be sure to include another $3x$ term for the missing vertical angle when I set up my equation.

$$3x + 70 + 2x + 3x + (2x + 38) + 32 = 360$$
$$3x + 2x + 3x + 2x + 70 + 38 + 32 = 360$$
$$10x + 140 = 360$$
$$10x + 140 - 140 = 360 - 140$$
$$10x = 220$$
$$\left(\frac{1}{10}\right)10x = \left(\frac{1}{10}\right)220$$
$$x = 22$$

$m\angle WSV = 3x° = 3(22°) = 66°$

3. The ratio of the measures of three adjacent angles on a line is $1 : 4 : 7$.

   a. Find the measures of the three angles.

I can use the ratio to set up an expression for each angle. I also know the measure of adjacent angles on a line must have a sum of $180°$.

$$m\angle 1 = x°, m\angle 2 = 4x°, m\angle 3 = 7x°$$

$$x + 4x + 7x = 180$$

$$12x = 180$$

$$\left(\frac{1}{12}\right)12x = \left(\frac{1}{12}\right)180$$

$$x = 15$$

$$m\angle 1 = 15°$$

$$m\angle 2 = 4(15°) = 60°$$

$$m\angle 3 = 7(15°) = 105°$$

   b. Draw a diagram to scale of these adjacent angles. Indicate the measurements of each angle.

I can use my protractor to measure the angles accurately.

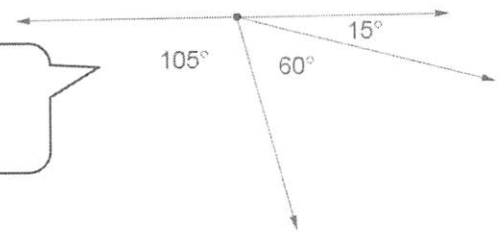

# G7-M3-Lesson 11: Angle Problems and Solving Equations

In a complete sentence, describe the angle relationships in each diagram. Write an equation for the angle relationship(s) shown in the figure, and solve for the indicated unknown angle.

1. Find the measure of $\angle HLG$.

*$\angle BLC$, $\angle CLD$, and $\angle DLE$ have a sum of $90°$.*

*$\angle ALK$, $\angle KLJ$, $\angle JLH$, $\angle HLG$, and $\angle GLF$ are angles on a line and have a sum of $180°$.*

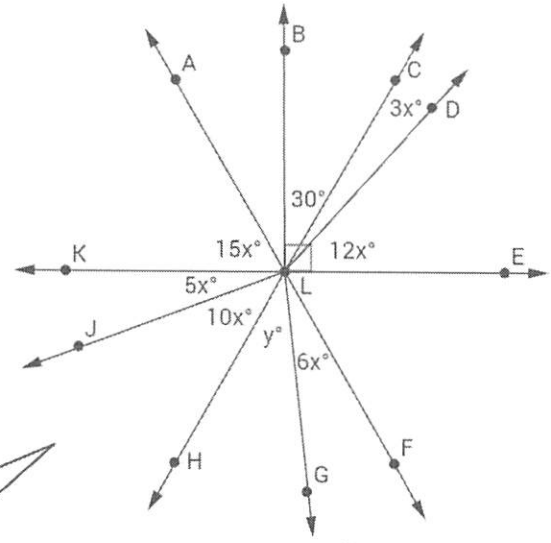


$$3x + 12x + 30 = 90$$
$$15x + 30 = 90$$
$$15x + 30 - 30 = 90 - 30$$
$$15x = 60$$
$$\left(\frac{1}{15}\right)15x = \left(\frac{1}{15}\right)60$$
$$x = 4$$

I look for the small box in the corner showing me 90° angles, and I also look for angles that form a straight line because their measures have a sum of 180°.

In order to solve for $y$, I must solve for $x$ first. The value of $x$ can be used to help determine the value of $y$.

$$15x + 5x + 10x + y + 6x = 180$$
$$15(4) + 5(4) + 10(4) + y + 6(4) = 180$$
$$60 + 20 + 40 + y + 24 = 180$$
$$144 + y = 180$$
$$144 - 144 + y = 180 - 144$$
$$y = 36$$

$m\angle HLG = 36°$

2. Find the measures of $\angle TWV$ and $\angle ZWV$.

*The measures of $\angle XWY$ and $\angle YWZ$ have a sum of $90°$. The measures of $\angle TWV$, $\angle VWZ$, and $\angle ZWY$ have a sum of $180°$.*

$90 - 65 = 25$

$m\angle ZWY = 25°$

I know that $\angle XWY$ and $\angle ZWY$ have a sum of $90°$. I can work backwards to determine the unknown angle.

$$24x + 7x + 25 = 180$$
$$31x + 25 = 180$$
$$31x + 25 - 25 = 180 - 25$$
$$31x = 155$$
$$\left(\frac{1}{31}\right)31x = \left(\frac{1}{31}\right)155$$
$$x = 5$$

I don't have all the information to use the angles on a line to solve for $x$ yet, but I can get the measure of $\angle ZWY$ by knowing that there are two angles that have a sum of $90°$ first.

$m\angle TWV = 24(5°) = 120°$

$m\angle VWZ = 7(5°) = 35°$

3. Find the measure of $\angle BAC$.

*Adjacent angles $6x°$ and $36°$ together are vertically opposite from and are equal to angle $108°$.*

$$6x + 36 = 108$$
$$6x + 36 - 36 = 108 - 36$$
$$6x = 72$$
$$\left(\frac{1}{6}\right)6x = \left(\frac{1}{6}\right)72$$
$$x = 12$$

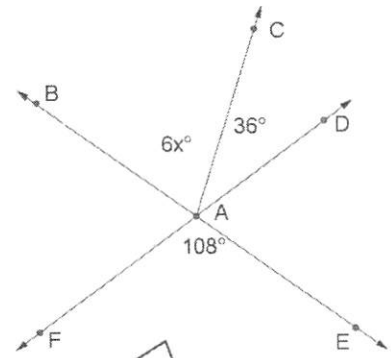


These angles are not on a line, about a point, or forming a right angle. Instead, I have vertical angles that are formed by two intersecting lines.

$m\angle BAC = 6(12°) = 72°$

4. The measures of three angles at a point are in the ratio of $2 : 7 : 9$. Find the measures of the angles.

I can use the ratio to write expressions to represent each of the angles.

$m\angle A = 2x°, m\angle B = 7x°, m\angle C = 9x°$

$$2x + 7x + 9x = 360$$
$$18x = 360$$
$$\left(\frac{1}{18}\right)18x = \left(\frac{1}{18}\right)360$$
$$x = 20$$

Since these three angles are at a point, their measures have a sum of $360°$.

$m\angle A = 2(20°) = 40°$

$m\angle B = 7(20°) = 140°$

$m\angle C = 9(20°) = 180°$

# G7-M3-Lesson 12: Properties of Inequalities

1. For each problem, use the properties of inequalities to write a true inequality statement.

   The two integers are $-8$ and $-3$.

   a. Write a true inequality statement.

   $-8 < -3$

   I can picture a number line to help me write the inequality. On a number line, $-8$ would be to the left of $-3$, which means it is less than $-3$.

   b. Add $-4$ to each side of the inequality. Write a true inequality statement.

   $-12 < -7$

   I need to add $-8 + -4$ and $-3 + -4$ and then write another inequality. I can always look back at Module 2 for help working with signed numbers.

   c. Multiply each number in part (a) by $-5$. Write a true inequality statement.

   $40 > 15$

   I need to multiply $-8 \times -5$ and $-3 \times -5$ and then write another inequality. I notice that I must reverse the inequality sign in order to write a true statement.

   d. Subtract $-c$ from each side of the inequality in part (a). Assume that $c$ is a positive number. Write a true inequality statement.

   $-8 - (-c) < -3 - (-c)$

   $-8 + c < -3 + c$

   I know that adding or subtracting an integer from both sides of the inequality preserves the inequality sign.

e. Divide each side of the inequality in part (a) by $-c$, where $c$ is positive. Write a true inequality statement.

$$\frac{-8}{-c} > \frac{-3}{-c}$$

$$\frac{8}{c} > \frac{3}{c}$$

I know that when I divide by a negative, the inequality symbol is reversed.

2. Kyla and Pedro went on vacation in northern Vermont during the winter. On Monday, the temperature was $-30°\text{F}$, and on Wednesday the temperature was $-8°\text{F}$.

a. Write an inequality comparing the temperature on Monday and the temperature on Wednesday.

$-30 < -8$

I need to compare these temperatures using less than or greater than.

b. If the temperatures felt 12 degrees colder each day with the wind chill, write a new inequality to show the comparison of the temperatures they actually felt.

$-42 < -20$

I could show the temperature with the wind chill by adding $-12$ to both sides.

c. Was the inequality symbol preserved or reversed? Explain.

*The inequality symbol was preserved because the number was added or subtracted from both sides of the inequality.*

# G7-M3-Lesson 13: Inequalities

I notice that the problem states that $x$ is a positive integer, which means that $x$ could be $1, 2, 3, 4, 5, 6, \ldots$.

1. If $x$ represents a positive integer, find the solutions to the following inequalities.

   a. $x + 9 \leq 5$

$$x + 9 \leq 5$$
$$x + 9 - 9 \leq 5 - 9$$
$$x \leq -4$$

I determined that the only values of $x$ that will make the inequality true are less than or equal to $-4$, but there are no positive integers that are less than or equal to $-4$.

*There are no positive integers that are a solution.*

   b. $5 + \frac{x}{7} > 12$

I can solve inequalities similar to how I solve equations, but I remember that there are times when I have to reverse the inequality symbol.

$$5 - 5 + \frac{x}{7} > 12 - 5$$
$$\frac{x}{7} > 7$$
$$7\left(\frac{x}{7}\right) > 7(7)$$
$$x > 49$$

*The possible solutions for $x$ would include all integers greater than $49$.*

If $x$ is greater than $49$, then it cannot be exactly $49$. Instead, $x$ may be $50, 51, 52, 53, \ldots$ or any larger integer.

For each part, I need to determine if any negative integer will be a possible solution, if only some negative integers are solutions, or if no negative integer could ever be a solution.

2. Recall that the symbol $\neq$ means not equal to. If $x$ represents a negative integer, state whether each of the following statements is always true, sometimes true, or false.

   a. $x > 3$

   ***False***

   The only possible integer solutions that make this statement true are those greater than 3, which would only be positive numbers like 4, 5, 6, ....

   b. $x \neq 0$

   ***Always True***

   This inequality states that $x$ is not 0. This would always be true, because if $x$ is all integers less than 0, $x$ will never equal 0.

   c. $x \leq 2$

   ***Always True***

   All negative numbers are less than 2, and I know $x$ represents a negative integer, so it must be less than 2.

   d. $x < -9$

   ***Sometimes True***

   Although there are some negative numbers that are less than $-9$, there are also some negative integers that would not be less than $-9$, like $-7$ or $-1$.

3. Three times the smaller of two consecutive even integers increased by the larger integer is at least 26.

Consecutive even integers are two apart, so I use $x$ to represent the first number and $x + 2$ to represent the second number.

Model the problem with an inequality, and determine which of the given values 4 and 6 are solutions. Then, find the smallest number that will make the inequality true.

$3x + x + 2 \geq 26$

I know that "at least" means that the sum will be 26 or more. So the sum will be greater than or equal to 26.

*For 4:*

$$\begin{aligned} 3(4) + (4) + 2 &\geq 26 \\ 12 + 4 + 2 &\geq 26 \\ 18 &\geq 26 \end{aligned}$$

***False, 4 is not a solution.***

*For 6:*

$$\begin{aligned} 3(6) + (6) + 2 &\geq 26 \\ 18 + 6 + 2 &\geq 26 \\ 26 &\geq 26 \end{aligned}$$

***True, 6 is a solution.***

To determine if a number is a solution of an inequality, I can just substitute the number in for $x$ and evaluate to see if the result is a true statement.

$$\begin{aligned} 3x + x + 2 &\geq 26 \\ 4x + 2 &\geq 26 \\ 4x + 2 - 2 &\geq 26 - 2 \\ 4x &\geq 24 \\ x &\geq 6 \end{aligned}$$

***The smallest number that will make the inequality true is 6.***

"At most" tells me that she can use 74 feet of fencing or less. So the total must be less than or equal to 74.

4. Rochelle has, at most, 74 feet of fencing to put around her veggie garden. She plans to create a rectangular garden that has a length that is 3 feet longer than the width. Write an inequality to model the situation. Then solve to determine the dimensions of the garden with the largest perimeter Rochelle can make.

The perimeter is the sum of all 4 sides of a rectangle. I must include all 4 sides when writing my inequality.

***Let $x$ represent the width.***

***Let $x + 3$ represent the length.***

$$x + x + x + 3 + x + 3 \leq 74$$
$$4x + 6 \leq 74$$
$$4x + 6 - 6 \leq 74 - 6$$
$$4x \leq 68$$
$$\left(\frac{1}{4}\right)(4x) \leq \left(\frac{1}{4}\right)(68)$$
$$x \leq 17$$

$17 + 3 = 20$

***In order to get the largest perimeter, the width would be 17 feet, and the length would be 20 feet.***

Once I solve, I need to use the "let" statements I wrote at the beginning to help me determine the meaning of my answer.





EUREKA MATH

# G7-M3-Lesson 14: Solving Inequalities

1. Ethan earns a commission of 5% of the total amount he sells. In addition, he is also paid \$380 per week. In order to stick to his budget, he needs to earn at least \$975 this week. Write an inequality with integer coefficients for the total sales needed to earn at least \$975, and describe what the solution represents.

Because he has to earn at least \$975, I know that I should use greater than or equal to 975 because Ethan needs to earn \$975 or more.

*Let the variable $p$ represent the purchase amount.*

Since percent means out of 100, I can show 5% as $\frac{5}{100}$.

$$\frac{5}{100}p + 380 \geq 975$$

$$(100)\left(\frac{5}{100}p\right) + 100(380) \geq 100(975)$$

Now that I have gotten rid of the fraction, this would be my inequality with integer coefficients.

$$5p + 38000 \geq 97500$$

$$5p + 38000 - 38000 \geq 97500 - 38000$$

$$5p \geq 59500$$

$$\left(\frac{1}{5}\right)(5p) \geq \left(\frac{1}{5}\right)(59500)$$

$$p \geq 11900$$

*Ethan's total sales must be at least $\$11,900$ if he wants to earn $\$975$ or more.*

2. Katie and Kane were exercising on Saturday. Kane was riding a bicycle 12 miles per hour faster than Katie was walking. Katie walked for $3\frac{1}{2}$ hours, and Kane bicycled for 2 hours. Altogether, Katie and Kane traveled no more than 57 miles. Find the maximum speed of each person.

| | *Rate* | *Time* | *Distance* |
|---|---|---|---|
| *Kane* | $x + 12$ | $2$ | $2(x + 12)$ |
| *Katie* | $x$ | $3\frac{1}{2}$ | $3\frac{1}{2}x$ |

I can organize all the information in a table and use the relationship $d = rt$.

$$2(x+12)+3\frac{1}{2}x \le 57$$

I know that sum of the two distances presented in the table must be no more than 57 miles, which means the sum must be less than or equal to 57.

$$2x+24+3\frac{1}{2}x \le 57$$

$$5\frac{1}{2}x+24 \le 57$$

$$5\frac{1}{2}x+24-24 \le 57-24$$

$$5\frac{1}{2}x \le 33$$

Rewriting mixed numbers as fractions greater than one can help make it easier to solve.

$$\frac{11}{2}x \le 33$$

$$\left(\frac{2}{11}\right)\left(\frac{11}{2}x\right) \le (33)\left(\frac{2}{11}\right)$$

$$x \le 6$$

$6+12=18$

*The maximum speed Katie was walking was 6 miles per hour, and the maximum speed Kane was riding the bike was 18 miles per hour.*

3. Systolic blood pressure is the higher number in a blood pressure reading. It is measured as the heart muscle contracts. Ramel is having his blood pressure checked. The nurse told him that the upper limit of his systolic blood pressure is equal to a third of his age increased by 117. If Ramel is 42 years old, write and solve an inequality to determine what is normal for his systolic blood pressure.

An upper limit provides the maximum number for Ramel's systolic blood pressure. That means that Ramel's systolic blood pressure must be less than or equal to the expression showing a third of his age increased by 117.

*Let $p$ represent the systolic blood pressure in millimeters of mercury (mmHg).*

*Let $a$ represent Ramel's age.*

$p \le \frac{1}{3}a+117$, *where* $a=42$.

$$p \le \frac{1}{3}(42)+117$$

I can just substitute in Ramel's age for $a$ in order to solve for $p$.

$$p \le 14+117$$

$$p \le 131$$

*The normal upper limit for Ramel is 131, which means that Ramel's systolic blood pressure should be 131 mmHg or lower.*

# G7-M3-Lesson 15: Graphing Solutions to Inequalities

Because this problem says at least 15 hours, I know that he must read 15 hours or more. I use the greater than or equal to symbol in my inequality to represent this relationship.

1. Doug has decided that he should read for at least 15 hours a week. On Monday and Tuesday, his days off from work, he reads for a total of $6\frac{1}{4}$ hours. For the remaining 5 days, he reads for the same amount of time each day. Find $t$, the amount of time he reads for each of the 5 days. Graph your solution.

*Let t represent the time, in hours, he spends reading on each of the remaining days.*

$$5t + 6\frac{1}{4} \geq 15$$

$$5t + 6\frac{1}{4} - 6\frac{1}{4} \geq 15 - 6\frac{1}{4}$$

I can unbundle to rewrite 15 as $14\frac{4}{4}$, when trying to subtract.

$$5t \geq 8\frac{3}{4}$$

$$\left(\frac{1}{5}\right)(5t) \geq \left(\frac{1}{5}\right)\left(8\frac{3}{4}\right)$$

$$t \geq \left(\frac{1}{5}\right)\left(\frac{35}{4}\right)$$

$$t \geq \frac{35}{20}$$

$$t \geq 1.75$$

*Doug must read for 1.75 hours or more on each of the remaining days.*

*Graph:*

Because I want to include 1.75 as a possible solution, I use a solid circle. The arrow indicates that all numbers greater than 1.75 are also included in the solution.

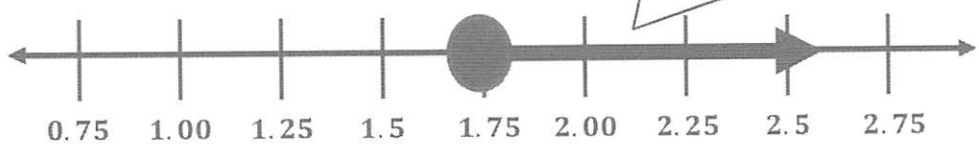

2. The length of a parallelogram is 70 centimeters, and its perimeter is less than 360 centimeters. Cherise writes an inequality and graphs the solution below to find the width of the parallelogram. Is she correct? If yes, write and solve the inequality to represent the problem and graph. If no, explain the error(s) Cherise made.

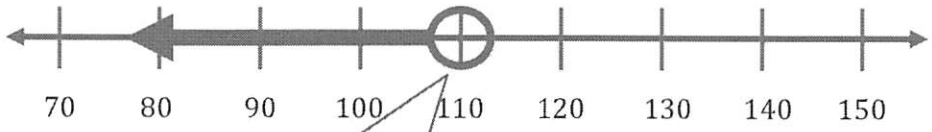


This graph shows the width must be less than 110, and it doesn't include 110 because there is an open circle.

*Let w represent the width of the parallelogram.*

$$2w + 2(70) < 360$$
$$2w + 140 < 360$$
$$2w + 140 - 140 < 360 - 140$$
$$2w < 220$$
$$\left(\frac{1}{2}\right)(2w) < \left(\frac{1}{2}\right)(220)$$
$$w < 110$$

A parallelogram has two lengths and two widths. The sum of all four sides will be the perimeter. I can use this information to set up my inequality.

*Yes, Cherise is correct.*

The width must be less than 110 in order for the perimeter to be less than 360. To graph this relationship, I do need an open circle because 110 is not included in the solution.

# G7-M3-Lesson 16: The Most Famous Ratio of All

1. Find the circumference.

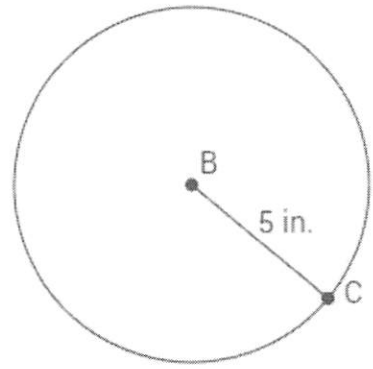


a. Give the exact answer in terms of $\pi$.

$d = 10$ in.

$C = \pi d$

$C = 10\pi$ in.

I know that the diameter of every circle is twice the length of the radius, which is given in the diagram.

b. Use $\pi \approx \frac{22}{7}$, and express your answer as a fraction in lowest terms.

$C \approx \frac{22}{7}(10 \text{ in.})$

$C \approx 31\frac{3}{7}$ in.

I use that the formula for circumference ($C = \pi d$) and use $\frac{22}{7}$ as the approximation for $\pi$.

c. Use the $\pi$ button on your calculator, and express your answer to the nearest hundredth.

$C = \pi(10 \text{ in.})$

$C \approx 31.42$ in.

In my calculator I type 10 and then press the multiplication and $\pi$ buttons to calculate the circumference of the given circle.

2. Consider the diagram shown.

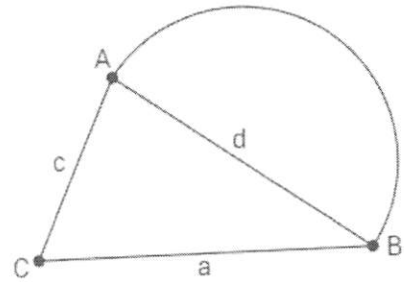


a. Explain in words how to determine the perimeter of the diagram.

*The perimeter would be the sum of two side lengths ($a$) and ($c$) and the circumference of half a circle with radius $d$.*

To calculate the circumference of a half circle, I use the formula $C = \frac{1}{2}\pi d$.

b. Write an algebraic equation that will result in the perimeter of the diagram.

$P = \frac{1}{2}\pi d + a + c$

I know the perimeter is the length around the outside of the diagram. It can be used to determine the amount of fencing or edging needed.

c. Find the perimeter of the figure if the diameter of the semicircle is 9 m, side length $c$ is 6 m, and side length $a$ is 10 m. Use 3.14 for $\pi$.

$P = \frac{1}{2}\pi d + a + c$

$P \approx \frac{1}{2}(3.14)(9) + 10 + 6$

$P \approx 14.13 + 10 + 6$

$P \approx 30.13$

*The perimeter of the diagram is about* $30.13$ m.

I can use the given side lengths and the equation I wrote in part (b) to calculate the perimeter of the diagram.

3. Dan wants to go on the longest bike ride possible. If he plans to complete a loop where he starts at point $D$ and ends back at point $D$, which route is the longest: following the semicircle path or following the path of the two smaller semicircles? Explain your reasoning. Let $\pi \approx 3.14$.

*Length of the single semicircle path:*

*Let $d$ represent the diameter of the semicircle.*

$P = \frac{1}{2}\pi d + d$

$P \approx \frac{1}{2}(3.14)(12) + 12$

$P \approx 18.84 + 12$

$P \approx 30.84$

*The length of the semicircle path is about* $30.84$ km.

In order to find the length of this entire path, I add the circumference of the semicircle and the length of the diameter.

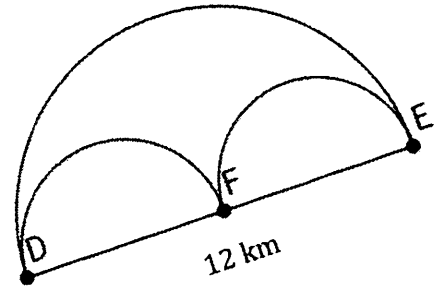


If Dan was only riding his bike from point $D$ to point $E$, he could either travel around the semicircle or follow the diameter of the circle.

*Length of the two smaller semicircles path:*

*Let $a$ represent the diameter of the smaller semicircles.*

$P = \frac{1}{2}\pi a + \frac{1}{2}\pi a + a + a$

$P \approx \frac{1}{2}(3.14)(6) + \frac{1}{2}(3.14)(6) + 6 + 6$

$P \approx 9.42 + 9.42 + 6 + 6$

$P \approx 30.84$

*The length of the two smaller semicircles path is about* $30.84$ km.

The two smaller semicircles each have a diameter of 6 km. I also have to add the diameter of each smaller semicircle to provide the length of segment $DE$.

*Dan can bike ride on either path because they cover the same distance. Neither path is longer than the other one.*

# G7-M3-Lesson 17: The Area of a Circle

1. Find the area of the circle. Use $\frac{22}{7}$ as an approximation for $\pi$.

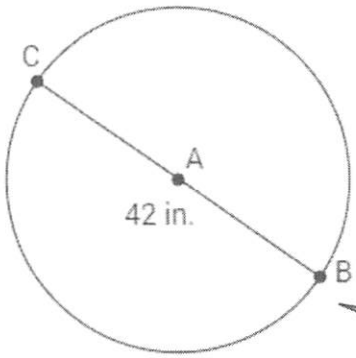


$r = 21 \text{ in.}$

$A = \pi r^2$

$A \approx \left(\frac{22}{7}\right)(21 \text{ in.})^2$

$A \approx \left(\frac{22}{7}\right)(441 \text{ in}^2)$

$A \approx 1,386 \text{ in}^2$

The diameter is given, but I need to determine the length of the radius to calculate the area. I know the length of the radius is half the length of the diameter.

2. A circle has a diameter of 14 cm.

   a. Find the exact area, and find an approximate area using $\pi \approx 3.14$.

   $r = 7 \text{ cm}$

   *Exact Area:*

   $A = \pi r^2$

   $A = \pi(7 \text{ cm})^2$

   $A = 49\pi \text{ cm}^2$

   $\pi$ is an irrational number, so I must leave $\pi$ in my answer to provide the exact area.

   *Approximate Area:*

   $A \approx 49(3.14) \text{ cm}^2$

   $A \approx 153.86 \text{ cm}^2$

   Using the approximation of 3.14 for $\pi$ provides an approximate area.

   b. What is the circumference of the circle using $\pi \approx 3.14$?

   $d = 14 \text{ cm}$

   $C \approx (3.14)(14 \text{ cm})$

   $C \approx 43.96 \text{ cm}$

   I remember from the previous lesson that the formula for circumference is $C = \pi d$, which means I need to use the given diameter.

3. A circle has a circumference of 264 ft. Approximate the area of the circle. Use $\pi \approx \frac{22}{7}$.

I can use the circumference to determine the diameter the circle.

$$C = \pi d$$
$$264 \approx \frac{22}{7} d$$
$$\left(\frac{7}{22}\right)(264) \approx \left(\frac{7}{22}\right)\left(\frac{22}{7} d\right)$$
$$84 \approx d$$

Now that I know the approximated diameter, I need to determine the radius to calculate the area of the circle.

$$42 \approx r$$
$$A \approx \left(\frac{22}{7}\right)(42^2)$$
$$A \approx \left(\frac{22}{7}\right)(1,764)$$
$$A \approx 5,544$$

*The area of the circle is approximately* $5,544 \text{ ft}^2$.

4. The area of a circle is $81\pi \text{ in}^2$. Find its circumference.

$$A = \pi r^2$$
$$81\pi = \pi r^2$$

I can use the area to determine the radius of the circle.

$$\left(\frac{1}{\pi}\right)(81\pi) = \left(\frac{1}{\pi}\right)(\pi r^2)$$
$$81 = r^2$$
$$9 = r$$

I know the radius is 9 because $9^2 = 81$.

$$18 = d$$

Now that I know the length of the diameter, I can calculate the circumference of the circle.

$$C = \pi d$$
$$C = 18\pi$$

*The circumference of the circle is* $18\pi$ in.

5. Find the ratio of the area of two circles with radii 5 in. and 6 in.

*The area of the circle with radius* 5 in. *is* $25\pi \text{ in}^2$. *The area of the circle with radius* 6 in. *is* $36\pi \text{ in}^2$. *The ratio of the area of the two circles is* $25\pi : 36\pi$ *or* $25 : 36$.

I calculate the area of each circle and then write the two areas as a ratio.

# G7-M3-Lesson 18: More Problems on Area and Circumference

1. Frederick is replacing a broken window that has a semicircle on top and a square on the bottom. He knows that the semicircular region has an area of $100.48 \text{ in}^2$.

   a. Draw a picture to represent the window.

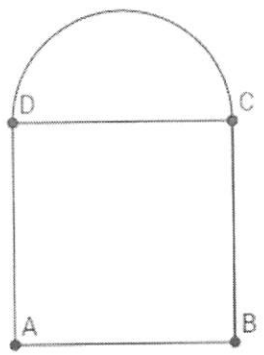


I can use the information I know to calculate the length of the radius of the semicircle.

   b. What is the length of the square? Use $\pi \approx 3.14$.

The given area is for the semicircle, so I need to multiply the area formula by $\frac{1}{2}$.

$$A = \frac{1}{2}\pi r^2$$
$$100.48 \approx \frac{1}{2}(3.14)(r^2)$$
$$100.48 \approx 1.57r^2$$
$$\left(\frac{1}{1.57}\right)(100.48) \approx \left(\frac{1}{1.57}\right)(1.57r^2)$$
$$64 \approx r^2$$
$$8 \approx r$$

I know the radius is about 8 because $8 \times 8 = 64$.

*The length of the diameter is approximately* $16 \text{ in.}$*, which means the length of the side of the square is approximately* $16 \text{ in.}$

The side length of the square is the same length as the diameter of the semicircle.

2. The diagram below is comprised of two squares and one quarter circle. It has a total length of 30 cm. What is the approximate area of the diagram? Use $\pi \approx 3.14$.

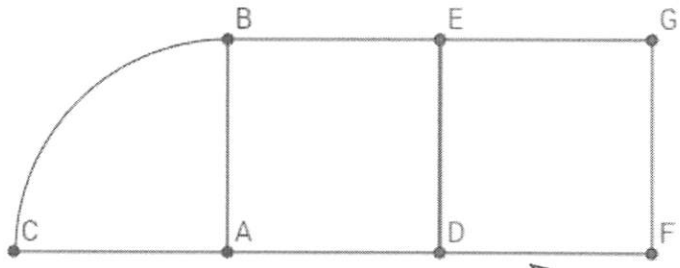


I know the total length is 30 cm, which means each section has a length of 10 cm.

*Area of the quarter circle:*

$A = \frac{1}{4}\pi r^2$

$A \approx \frac{1}{4}(3.14)(10^2)$

$A \approx 78.5$

I must multiply the area formula by $\frac{1}{4}$ since I am calculating the area of a quarter circle.

*Area of one square:*

$A = s^2$

$A = 10^2$

$A = 100$

I know that both squares will have the same area.

*The total area of the diagram will be the sum of the area of the quarter circle and the area of the two squares.*

$78.5 + 100 + 100 \approx 278.5$

*Therefore, the sum of the diagram is approximately* $278.5 \text{ cm}^2$.

3. The image below is the top of a unique end table. Help David determine the area of the table, so he can purchase a glass cover for the table. Approximate $\pi$ as 3.14.

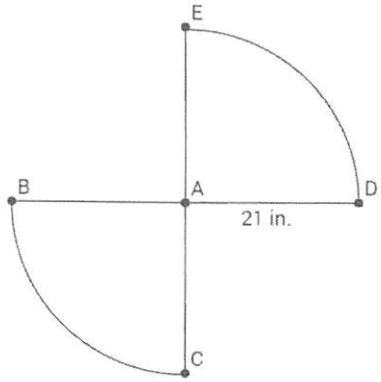


$A = \frac{1}{4}\pi r^2$

$A \approx \frac{1}{4}(3.14)(21 \text{ in.})^2$

$A \approx 346.185 \text{ in}^2$

Each part of the table represents a quarter circle, so I multiply the area formula by $\frac{1}{4}$.

*There are two quarter circles with the same area.*

$A \approx 2(346.185 \text{ in}^2) \approx 692.37 \text{ in}^2$

*The area of the entire table is approximately* $692.37 \text{ in}^2$.

4. Delecia is painting polk-a-dots in her daughter's room. Her daughter wants each one to have a purple center and a pink outline. Use the diagram below to determine the area of the pink paint. Use $\pi \approx 3.14$.

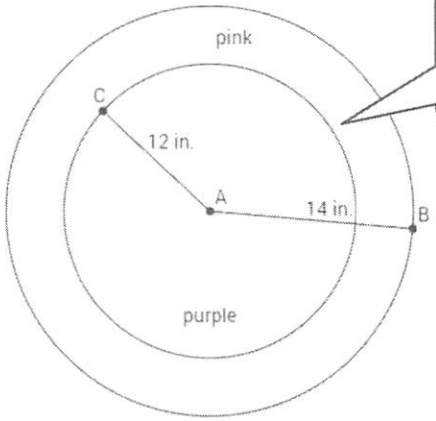


To find the area of pink paint, I need to find the area of the outside circle and the area of the inside circle.

*Area of the outside circle:*

$A = \pi r^2$

$A = \pi(14 \text{ in.})^2$

$A = 196\pi \text{ in}^2$

I use the exact area through all the calculations.

*Area of the inside circle:*

$A = \pi r^2$

$A = \pi(12 \text{ in.})^2$

$A = 144\pi \text{ in}^2$

To determine the area of just the pink paint, I need to find the difference of the two areas.

$196\pi \text{ in}^2 - 144\pi \text{ in}^2 = 52\pi \text{ in}^2$

*The exact area of the pink circle is* $52\pi \text{ in}^2$.

$A \approx 52(3.14) \text{ in}^2 \approx 163.28 \text{ in}^2$

*The approximate area of the pink circle is* $163.28 \text{ in}^2$.

# G7-M3-Lesson 19: Unknown Area Problems on the Coordinate Plane

1. Find the area of each figure. When necessary, use 3.14 as an approximation for $\pi$.

a.

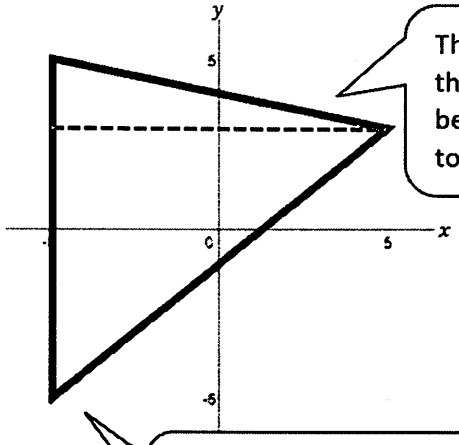


This dashed line represents the height of the triangle because it is perpendicular to the base.

$$A = \frac{1}{2}bh$$

$$A = \frac{1}{2}(10 \text{ units})(10 \text{ units})$$

$$A = 50 \text{ sq. units}$$

I can count the number of units to determine the length of the base and height of the acute triangle.

I notice that the semicircle's diameter has the same length as the rectangle's width (6 units). Therefore, the radius of the semicircle is 3 units.

b. $A = \textit{area of the rectangle} + \textit{area of the semicircle}$

$$\mathrm{A} = (6 \text{ units} \times 8 \text{ units}) + \left(\frac{1}{2}\pi(3 \text{ units})^2\right)$$

$$\mathrm{A} = 48 \text{ units}^2 + 4.5\pi \text{ units}^2$$

$$\mathrm{A} \approx 48 \text{ units}^2 + 14.13 \text{ units}^2$$

$$\mathrm{A} \approx 62.13 \text{ units}^2$$

*The area of the region is approximately* $62.13 \text{ units}^2$.

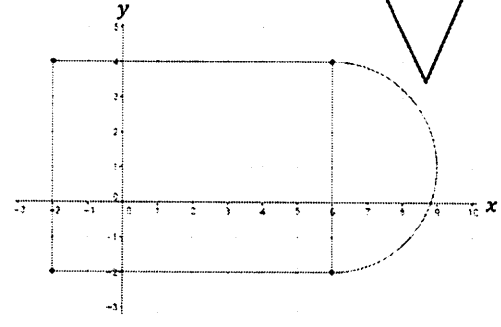

c.

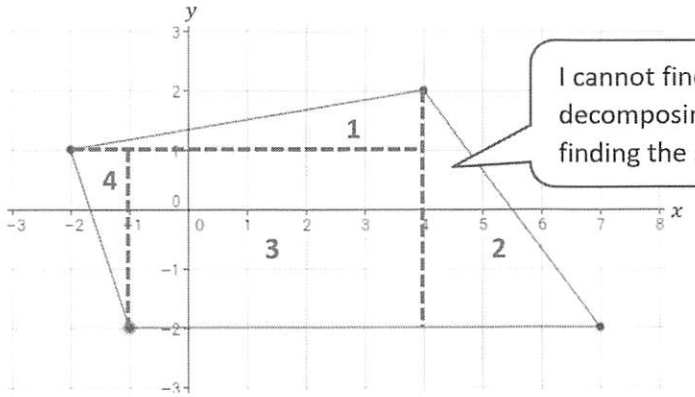


I cannot find the area of this region without decomposing it into four regions and then finding the sum of the four different areas.

$A = \text{area of region 1} + \text{area of region 2} + \text{area of region 3} + \text{area of region 4}$

$A = \left(\frac{1}{2} \times 1 \text{ unit} \times 6 \text{ units}\right) + \left(\frac{1}{2} \times 4 \text{ units} \times 3 \text{ units}\right) + (5 \text{ units} \times 3 \text{ units}) + \left(\frac{1}{2} \times 1 \text{ unit} \times 3 \text{ units}\right)$

$A = 3 \text{ units}^2 + 6 \text{ units}^2 + 15 \text{ units}^2 + 1.5 \text{ units}^2$

$A = 25.5 \text{ units}^2$

To calculate the area of a triangle, I use the formula $A = \frac{1}{2}bh$. The area formula of rectangles is $A = lw$.

2. Draw a figure in the coordinate plane that matches the description.

A triangle with an area of 10 sq. units.

$A = \frac{1}{2}bh$

$10 \text{ sq. units} = \frac{1}{2}bh$

$\frac{2}{1}(10 \text{ sq. units}) = \frac{2}{1}\left(\frac{1}{2}bh\right)$

$20 \text{ sq. units} = bh$

I can use my knowledge of solving equations to determine that the $bh$ must equal 20 sq. units. This means that the base and the height must be factors of 20.

One possible answer is a right triangle with a height of 5 units and a base of 4 units, which results in a product of 20 sq. units.

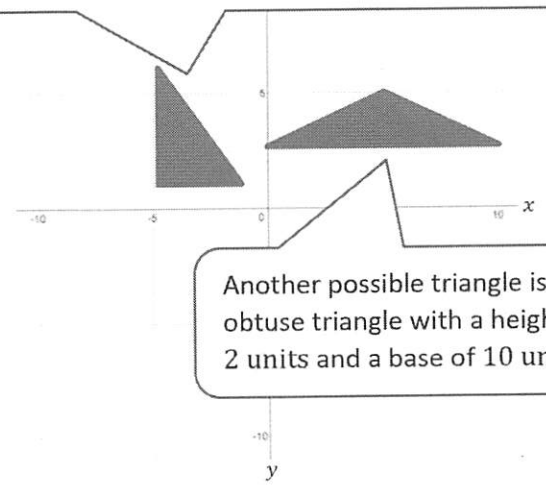


Another possible triangle is an obtuse triangle with a height of 2 units and a base of 10 units.

3. Find the area of triangle $DEF$.

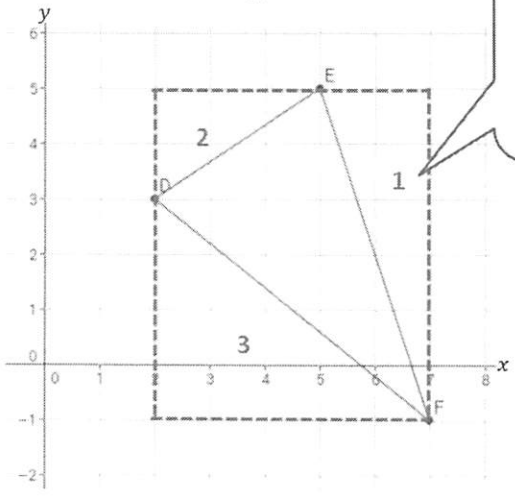


I am unable to determine the base and height of the triangle, which is needed to calculate the area. Therefore, I compose a rectangle around triangle $DEF$.

*Area of the rectangle:*

$A = 6 \text{ units} \times 5 \text{ units}$

$A = 30 \text{ sq. units}$

The rectangle is composed of three right triangles and triangle $DEF$.

*Area of triangle 1:*

$A = \frac{1}{2} \times 6 \text{ units} \times 2 \text{ units}$

$A = 6 \text{ sq. units}$

*Area of triangle 2:*

$A = \frac{1}{2} \times 2 \text{ units} \times 3 \text{ units}$

$A = 3 \text{ sq. units}$

*Area of triangle 3:*

$A = \frac{1}{2} \times 4 \text{ units} \times 5 \text{ units}$

$A = 10 \text{ sq. units}$

Area of triangle $DEF = 30 \text{ sq. units} - (6 \text{ sq. units} + 3 \text{ sq. units} + 10 \text{ sq. units})$

Area of triangle $DEF = 30 \text{ sq. units} - 19 \text{ sq. units}$

Area of triangle $DEF = 11 \text{ sq. units}$

*The area of triangle $DEF$ is $11 \text{ sq. units}$.*

To determine the area of triangle $DEF$, I must subtract the areas of the three right triangles from the composed rectangle.

4. Find the area of the quadrilateral using two different methods.

When I decompose, I break the shape into smaller shapes and then calculate the sum of these areas.

*Method 1: Decompose*

*Area of the rectangle:*

$A = 5 \text{ units} \times 4 \text{ units}$

$A = 20 \text{ sq. units}$

*Area of the triangle:*

$A = \frac{1}{2} \times 2 \text{ units} \times 4 \text{ units}$

$A = 4 \text{ sq. units}$

$A = 20 \text{ sq. units} + 4 \text{ sq. units}$

$A = 24 \text{ sq. units}$

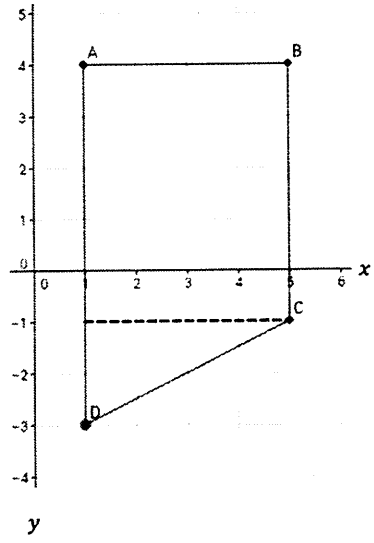


I compose a larger shape that surrounds the original quadrilateral. I then calculate the difference of the area of the larger shape and the shape that is not included in the original quadrilateral.

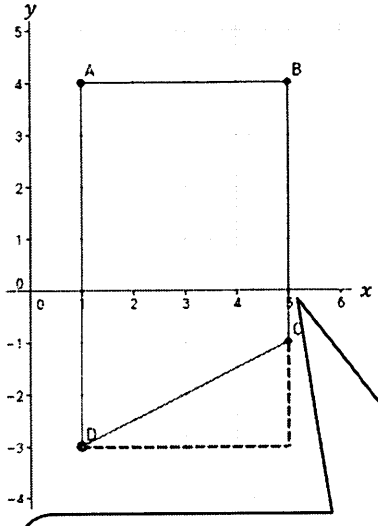


*Method 2: Compose*

*Area of the rectangle*

$A = 7 \text{ units} \times 4 \text{ units}$

$A = 28 \text{ sq. units}$

*Area of the triangle:*

$A = \frac{1}{2} \times 2 \text{ units} \times 4 \text{ units}$

$A = 4 \text{ sq. units}$

$A = 28 \text{ sq. units} - 4 \text{ sq. units}$

$A = 24 \text{ sq. units}$

I could also recognize the original shape as a trapezoid and use the formula to calculate the area of a trapezoid:

$A = \frac{1}{2}(\text{base } 1 + \text{base } 2) \times \text{height}.$

# G7-M3-Lesson 20: Composite Area Problems

1. The figure shows two semicircles. Find the area of the shaded region. Use 3.14 for $\pi$.

I remember from previous lessons how to calculate the area of a circular region.

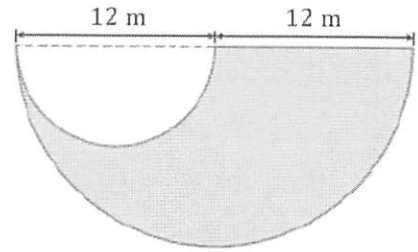


*Area of the larger semicircle:*

$A = \frac{1}{2}\pi r^2$

$A \approx \frac{1}{2}(3.14)(12\text{ m})^2$

The radius of the larger semicircle is 12 m.

$A \approx 226.08\text{ m}^2$

*Area of the smaller semicircle:*

$A = \frac{1}{2}\pi r^2$

$A \approx \frac{1}{2}(3.14)(6\text{ m})^2$

The radius of the smaller semicircle is 6 m.

$A \approx 56.52\text{ m}^2$

The area of the shaded region is the difference between the area of each semicircle.

*Area of the shaded region:*

$A \approx 226.08\text{ m}^2 - 56.52\text{ m}^2$

$A \approx 169.56\text{ m}^2$

*The approximate area of the shaded region is* $169.56\text{ m}^2$.

2. Find the area of the shaded region. Use $3.14$ for $\pi$.

In order to determine the area of the shaded region, I need to subtract the area of the semicircle from the area of the square.

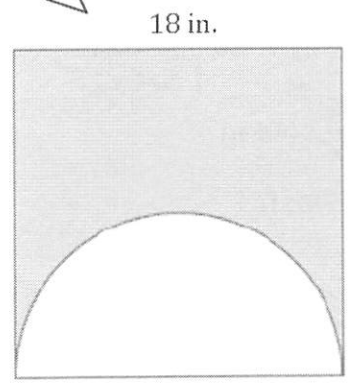


*Area of the square:*

$18 \text{ in.} \times 18 \text{ in.} = 324 \text{ in}^2$

*Area of the semicircle:*

$A = \frac{1}{2}\pi r^2$

$A \approx \frac{1}{2}(3.14)(9 \text{ in.})^2$

$A \approx 127.17 \text{ in}^2$

The diameter of the semicircle is the same length as a side of the square (18 in.), which means the radius of the semicircle is 9 in. because it is half of the diameter.

*Area of the shaded region:*

$A \approx 324 \text{ in}^2 - 127.17 \text{ in}^2$

$A \approx 196.83 \text{ in}^2$

*The area of the shaded region is approximately* $196.83 \text{ in}^2$.

3. Sydney created a flower petal stencil to use to decorate the walls of her new daycare center. Sydney needs to calculate the area of each petal in order to plan the pattern on the wall. What is the area of Sydney's stencil. Provide your answer in terms of $\pi$.

*Area of Region 1:*

$A = \frac{1}{2}\pi r^2$

$A = \frac{1}{2}\pi(14 \text{ in.})^2$

$A = 98\pi \text{ in}^2$

The radius of Region 1 is half the diameter of 28 in.

I decompose the petal into two different regions to make it easier to calculate the area.

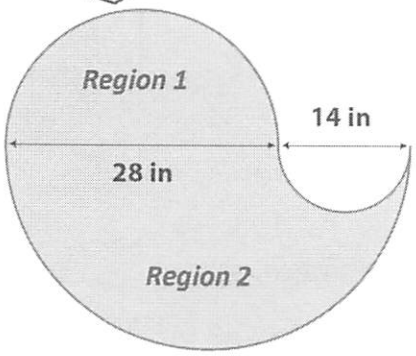


Region 2 is the larger semicircle that has a smaller semicircle cut out of it. Therefore, I need to find the area of each semicircle and then calculate the difference.

*Area of Region 2:*

*Let $a$ represent the radius of the larger semicircle in region 2.*
*Let $b$ represent the radius of the smaller semicircle in region 2.*

The diameter of the larger semicircle is 28 in. +14 in., or 42 in., which makes the radius 21 in.

$A = \frac{1}{2}\pi a^2 - \frac{1}{2}\pi b^2$

$A = \frac{1}{2}\pi(21 \text{ in.})^2 - \frac{1}{2}\pi(7 \text{ in.})^2$

$A = 220.5\pi \text{ in}^2 - 24.5\pi \text{ in}^2$

$A = 196\pi \text{ in}^2$

*Area of the flower petal:*

$A = 98\pi \text{ in}^2 + 196\pi \text{ in}^2$

$A = 294\pi \text{ in}^2$

Now that I know the area of each region, I find the total area by calculating the sum of the areas of the two regions.

*The exact area of the flower petal is $294\pi \text{ in}^2$.*





EUREKA MATH

4. The figure is formed by five rectangles. Find the area of the unshaded rectangular region.

*area of the entire rectangle − area of the shaded rectangles = area of the unshaded rectangular region*

$A = 27\text{ ft.} \times 17\text{ ft.} - \left((27\text{ ft.} \times 5\text{ ft.}) + 2(12\text{ ft.} \times 5\text{ ft.}) + (12\text{ ft.} \times 10\text{ ft.})\right)$

$A = 459\text{ ft}^2 - \left(135\text{ ft}^2 + 120\text{ ft}^2 + 120\text{ ft}^2\right)$

$A = 459\text{ ft}^2 - 375\text{ ft}^2$

$A = 84\text{ ft}^2$

*The area of the unshaded rectangular region is* $84\text{ ft}^2$.

I know this missing length is 10 ft. because the entire side length must be 27 ft.

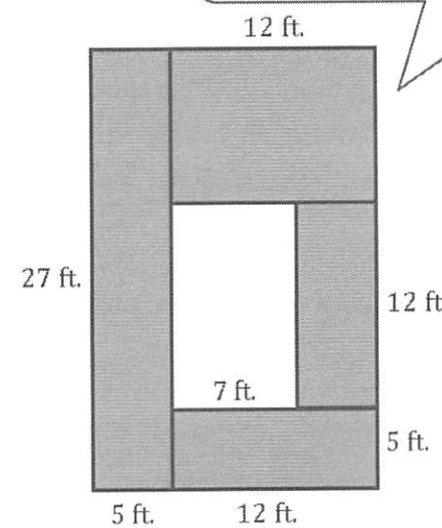


5. The figure is a rectangle made out of triangles. Find the area of the shaded region.

*area of the shaded region = area of the rectangle − area of the unshaded triangles*

$A = 44\text{ in.} \times 36\text{ in.} - \left(\left(\frac{1}{2}\right)(18\text{ in.} \times 44\text{ in.}) + \left(\frac{1}{2}\right)(18\text{ in.} \times 36\text{ in.})\right)$

$A = 1,584\text{ in}^2 - (396\text{ in}^2 + 324\text{ in}^2)$

$A = 1,584\text{ in}^2 - 720\text{ in}^2$

$A = 864\text{ in}^2$

*The area of the unshaded region is* $864\text{ in}^2$.

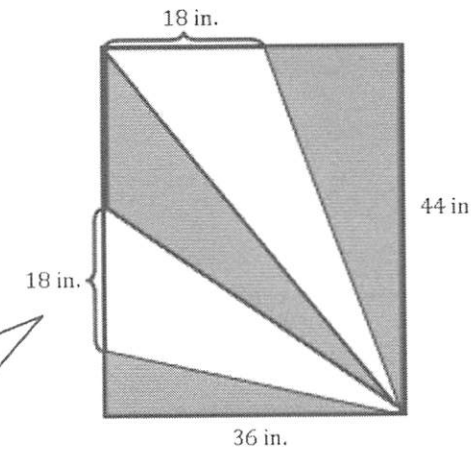


The two unshaded regions are obtuse triangles, so I use the formula $A = \frac{1}{2}bh$ to calculate their areas.

# G7-M3-Lesson 21: Surface Area

## Surface Area of Nets

1. For the following net, draw a solid represented by the net, indicate the type of solid, and then find the solid's surface area.

*Right triangular prism*

$SA = LA + 2B$

The figure has two identical bases, which means the net represents a prism. Since both of the bases are triangles, the figure is a triangular prism.

In order to find the surface area, I find the area of the lateral faces and then add that to the area of both bases.

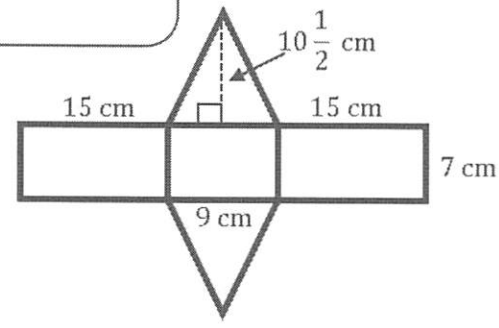


$LA = P \cdot h$

$LA = (15 \text{ cm} + 9 \text{ cm} + 15 \text{ cm})(7 \text{ cm})$

$LA = (39 \text{ cm})(7 \text{ cm})$

$LA = 273 \text{ cm}^2$

$B = \frac{1}{2}(9 \text{ cm})(10\frac{1}{2} \text{ cm})$

$B = 47.25 \text{ cm}^2$

$SA = 273 \text{ cm}^2 + 2(47.25 \text{ cm}^2)$

$SA = 273 \text{ cm}^2 + 94.5 \text{ cm}^2$

$SA = 367.5 \text{ cm}^2$

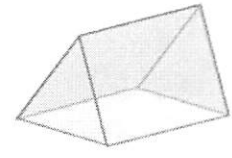

(3-Dimensional Form)

## Surface Area of Cubes

2. Given the cube with edges that are $\frac{1}{2}$ inch long.

   a. Find the surface area of the cube.

$SA = 6s^2$

A cube has 6 identical faces, so the area of all the faces will be the same.

$SA = 6\left(\frac{1}{2}\text{ in.}\right)^2$

$SA = 6\left(\frac{1}{4}\text{ in}^2\right)$

$SA = 1\frac{1}{2}\text{ in}^2$

   b. Maria makes a scale drawing of the cube using a scale factor of 8. Find the surface area of the cube that Maria drew.

$\frac{1}{2}\text{ in.} \cdot 8 = 4\text{ in.}$; *the edge lengths of Maria's drawing would be* $4\text{ in.}$

I use the scale factor to determine the length of the edges in the scale drawing.

$SA = 6(4\text{ in.})^2$

$SA = 6(16\text{ in}^2)$

$SA = 96\text{ in}^2$

   c. What is the ratio of the surface area of the scale drawing to the surface area of the actual cube, and how does the value of the ratio compare to the scale factor?

$96 \div 1\frac{1}{2}$

I divide the two surface areas to determine the ratio.

$96 \div \frac{3}{2}$

$96 \times \frac{2}{3}$

$64$

The value of the ratio is $\frac{x}{y}$ or $\frac{64}{1}$, which is the same as the scale factor squared.

*The ratio of the surface area of the scale drawing to the surface area of the actual cube is* $64:1$. *The value of the ratio is* $64$. *The scale factor of the drawing is* $8$, *and the value of the ratio of the surface area of the drawing to the surface area of the actual cube is* $8^2$, *or* $64$.

## Surface Area of Prisms

3. Find the surface area of each of the following right prisms using the formula $SA = LA + 2B$.

   a. Trapezoidal Prism

$SA = LA + 2B$

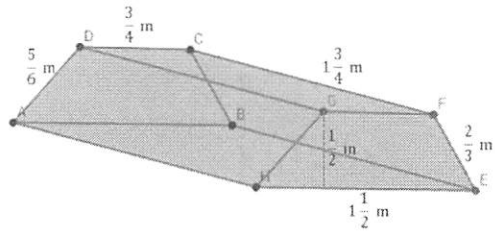


$$LA = \left(\frac{2}{3}\text{m} + \frac{3}{4}\text{m} + \frac{5}{6}\text{m} + 1\frac{1}{2}\text{m}\right)\left(1\frac{3}{4}\text{m}\right)$$

$$LA = \left(\frac{8}{12}\text{m} + \frac{9}{12}\text{m} + \frac{10}{12}\text{m} + 1\frac{6}{12}\text{m}\right)\left(1\frac{3}{4}\text{m}\right)$$

I need common denominators before I can add fractions.

$$LA = \left(3\frac{3}{4}\text{m}\right)\left(1\frac{3}{4}\text{m}\right)$$

$$LA = \left(\frac{15}{4}\text{m}\right)\left(\frac{7}{4}\text{m}\right)$$

$$LA = \frac{105}{16}\text{m}^2$$

$$LA = 6\frac{9}{16}\text{m}^2$$

$$B = \frac{1}{2}(b_1 + b_2)h$$

$$B = \frac{1}{2}\left(\frac{3}{4}\text{m} + 1\frac{1}{2}\text{m}\right)\left(\frac{1}{2}\text{m}\right)$$

$$B = \frac{1}{2}\left(2\frac{1}{4}\text{m}\right)\left(\frac{1}{2}\text{m}\right)$$

$$B = \frac{9}{16}\text{m}^2$$

The base of the prism is a trapezoid, so I use the area formula for a trapezoid to determine the area of each base.

$$SA = 6\frac{9}{16}\text{m}^2 + \frac{2}{1}\left(\frac{9}{16}\text{m}^2\right)$$

$$SA = 6\frac{9}{16}\text{m}^2 + \frac{18}{16}\text{m}^2$$

$$SA = 6\frac{9}{16}\text{m}^2 + 1\frac{2}{16}\text{m}^2$$

$$SA = 7\frac{11}{16}\text{m}^2$$

When I multiply, I change the whole number to a fraction $\left(\frac{2}{1}\right)$ and then multiply the numerators and the denominators.

b. Kite Prism

$SA = LA + 2B$

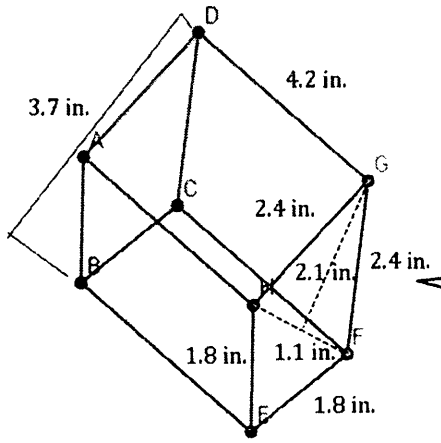


To find the area of the base, I decompose the base into two triangles.

$LA = (2.4 \text{ in.} + 2.4 \text{ in.} + 1.8 \text{ in.} + 1.8 \text{ in.})(4.2 \text{ in.})$

$LA = (8.4 \text{ in.})(4.2 \text{ in.})$

$LA = 35.28 \text{ in}^2$

$B = \frac{1}{2}(2.1 \text{ in.} \times 1.1 \text{ in.}) + \frac{1}{2}(1.6 \text{ in.} \times 1.1 \text{ in.})$

$B = \frac{1}{2}(2.31 \text{ in}^2 + 1.76 \text{ in}^2)$

$B = \frac{1}{2}(4.07 \text{ in}^2)$

$B = 2.035 \text{ in}^2$

I need to use the given measurements to determine the height of the second triangle.

$3.7 \text{ in.} - 2.1 \text{ in.} = 1.6 \text{ in.}$

$SA = 35.28 \text{ in}^2 + 2(2.035 \text{ in}^2)$

$SA = 35.28 \text{ in}^2 + 4.07 \text{ in}^2$

$SA = 39.35 \text{ in}^2$

4. The surface area of the right rectangular prism is $164\frac{1}{2}$ ft$^2$. The dimensions of its base are 5 ft. and 8 ft. Use the formulas $SA = LA + 2B$ and $LA = Ph$ to find the unknown height, $h$, of the prism.

$$SA = LA + 2B$$

$$SA = Ph + 2B$$

I know $LA = Ph$, so I can substitute $Ph$ into the equation for $LA$.

$$164\frac{1}{2}\text{ ft}^2 = (5\text{ ft.} + 8\text{ ft.} + 5\text{ft.} + 8\text{ ft.})h + 2(5\text{ ft.} \times 8\text{ ft.})$$

$$164\frac{1}{2}\text{ ft}^2 = (26\text{ ft.})h + 80\text{ ft}^2$$

I substitute all the values I know into the equation. However, I do not know the value of $h$.

$$164\frac{1}{2}\text{ ft}^2 - 80\text{ ft}^2 = (26\text{ ft.})h + 80\text{ ft}^2 - 80\text{ ft}^2$$

$$84\frac{1}{2}\text{ ft}^2 = (26\text{ ft.})h$$

I use my knowledge of solving equations to determine the height of the prism.

$$\left(\frac{1}{26\text{ ft.}}\right)\left(84\frac{1}{2}\text{ ft}^2\right) = \left(\frac{1}{26\text{ ft.}}\right)(26\text{ ft.})h$$

$$3\frac{1}{4}\text{ ft.} = h$$

***The height of the prism is*** $3\frac{1}{4}$ ft.

# G7-M3-Lesson 22: Surface Area

## Surface Area of Nets

1. For the following net, draw (or describe) the solid represented by the net, and find its surface area. Each of the triangular faces is identical.

*The net represents a square pyramid where the four lateral faces are identical triangles. The base is square.*

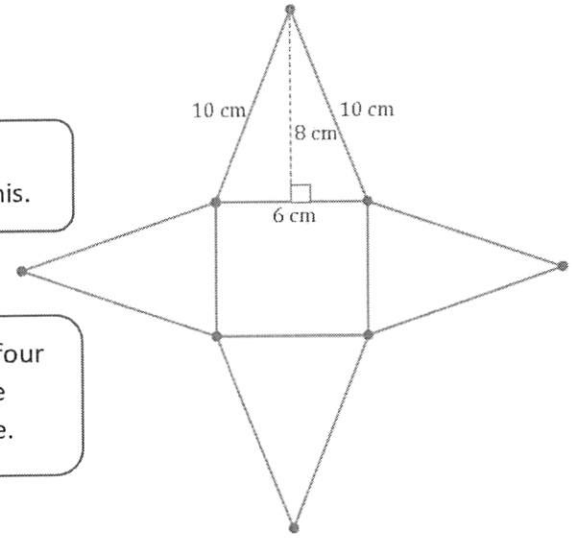


The pyramid only has one base, so the formula for surface area should reflect this.

$SA = LA + B$

The lateral area is the area of the four identical triangles. The area of the base is the area of the square base.

$LA = 4\left(\frac{1}{2} \times 8 \text{ cm} \times 6 \text{ cm}\right)$

$LA = 4(24 \text{ cm}^2)$

$LA = 96 \text{ cm}^2$

$B = 6 \text{ cm} \times 6 \text{ cm}$

$B = 36 \text{ cm}^2$

$SA = 96 \text{ cm}^2 + 36 \text{ cm}^2$

$SA = 132 \text{ cm}^2$

## Surface Area of Multiple Cubes

I know the volume of a cube is $s^3$, which means each edge length is $\frac{1}{3}$ cm because $\left(\frac{1}{3}\text{ cm}\right)^3 = \frac{1}{27}\text{ cm}^3$.

2. In the diagram, there are 14 cubes glued together to form a solid. Each cube has a volume of $\frac{1}{27}\text{ cm}^3$. Find the surface area of the solid.

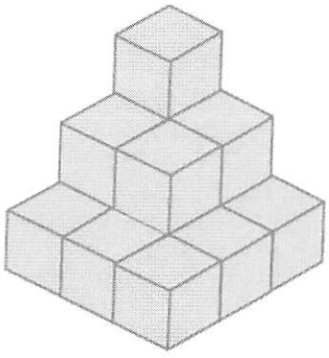

*Each cube has edges that are $\frac{1}{3}$ cm long.*

*The cube faces have an area of $\left(\frac{1}{3}\text{ cm}\right)^2$ or $\frac{1}{9}\text{ cm}^2$.*

*There are 42 cube faces that make up the surface of the solid.*

I also have to remember that there are faces that I cannot see.

$SA = 42\left(\frac{1}{9}\text{ cm}^2\right)$

$SA = 4\frac{2}{3}\text{ cm}^2$

## Surface Area of Prisms with Shapes Cut Out

3. Find the surface area of the solid shown in the diagram. The solid is a right triangular prism (with right triangular bases) with a smaller right triangular prism removed from it.

$SA = LA + 2B$

$LA = Ph$

$LA = \left(7\text{ m} + 7\text{ m} + 9\frac{9}{10}\text{ m}\right)(3\text{ m})$

$LA = (23\frac{9}{10}\text{ m})(3\text{ m})$

$LA = 71\frac{7}{10}\text{ m}^2$

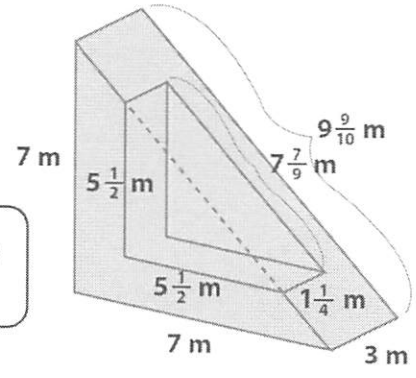


The $7\frac{7}{9}$ m by $1\frac{1}{4}$ m rectangle has to be taken away from the lateral area.

$A = 7\frac{7}{9}\text{ m} \times 1\frac{1}{4}\text{ m}$

$A = 9\frac{13}{18}\text{ m}^2$

$LA = 71\frac{7}{10}\text{ m}^2 - 9\frac{13}{18}\text{ m}^2$

$LA = 61\frac{44}{45}\text{ m}^2$

Two lateral faces of the smaller triangular prisms must be added.

The bases of the larger triangular prism are isosceles triangles.

$$SA = 61\frac{44}{45}\text{ m}^2 + 2\left(5\frac{1}{2}\text{ m} \times 1\frac{1}{4}\text{ m}\right) + 2\left(\frac{1}{2} \times 7\text{ m} \times 7\text{ m}\right)$$

$$SA = 61\frac{44}{45}\text{ m}^2 + 13\frac{3}{4}\text{ m}^2 + 49\text{ m}^2$$

$$SA = 124\frac{131}{180}\text{ m}^2$$

4. The diagram below shows a cube that has had three square holes punched completely through the cube on three perpendicular axes. Find the surface area of the remaining solid.

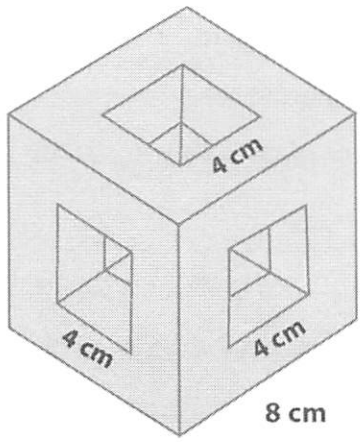


The exterior is a cube with a square hole on each of its six faces.

*Surface area of the exterior:*

$$SA = 6(8\text{ cm} \times 8\text{ cm}) - 6(4\text{ cm} \times 4\text{ cm})$$

$$SA = 6(64\text{ cm}^2) - 6(16\text{ cm}^2)$$

$$SA = 384\text{ cm}^2 - 96\text{ cm}^2$$

$$SA = 288\text{ cm}^2$$

*Surface area of the holes:*

Each of the holes is a square with a depth of 2 cm.

$$SA = 6(LA)$$

$$SA = 6((4\text{ cm} + 4\text{ cm} + 4\text{ cm} + 4\text{ cm}) \times 2\text{ cm})$$

$$SA = 6(16\text{ cm} \times 2\text{ cm})$$

$$SA = 6(32\text{ cm}^2)$$

$$SA = 192\text{ cm}^2$$

The total surface area would be the sum of the exterior surface area and the area of the holes.

*Total surface area:*

$$SA = 288\text{ cm}^2 + 192\text{ cm}^2$$

$$SA = 480\text{ cm}^2$$

# G7-M3-Lesson 23: The Volume of a Right Prism

1. Calculate the volume of each right prism using the formula $V = Bh$.

a.

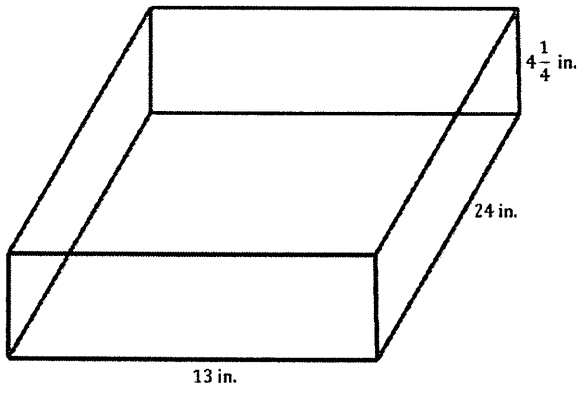


To calculate the volume of the prism, I find the product of the area of the base and the height of the prism.

$V = Bh$

$V = (13 \text{ in.} \times 24 \text{ in.}) \times 4\frac{1}{4} \text{ in.}$

$V = 312 \text{ in}^2 \times 4\frac{1}{4} \text{ in.}$

$V = 1,326 \text{ in}^3$

*The volume of the solid is* $1,326 \text{ in}^3$.

b. $B = A_{\text{lg rectangle}} - A_{\text{sm rectangle}}$

$B = \left(8\frac{1}{3} \text{ cm} \times 5 \text{ cm}\right) - (3 \text{ cm} \times 2 \text{ cm})$

$B = \left(\frac{25}{3} \text{ cm} \times 5 \text{ cm}\right) - 6 \text{ cm}^2$

$B = 41\frac{2}{3} \text{ cm}^2 - 6 \text{ cm}^2$

$B = 35\frac{2}{3} \text{ cm}^2$

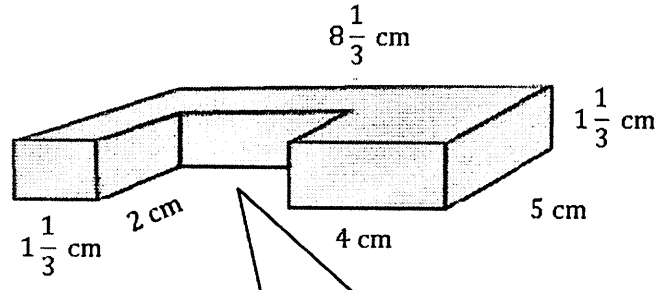


There is a section cut out of the prism. I can find the area of the entire base and then subtract the area that has been cut out of the prism.

$V = Bh$

$V = 35\frac{2}{3} \text{ cm}^2 \left(1\frac{1}{3} \text{ cm}\right)$

$V = \frac{107}{3} \text{ cm}^2 \left(\frac{4}{3} \text{ cm}\right)$

$V = \frac{428}{9} \text{ cm}^3$

$V = 47\frac{5}{9} \text{ cm}^3$

Once I calculate the area of the base, I still multiply it by the height of the prism to calculate the volume of the entire prism.

*The volume of the solid is* $47\frac{5}{9} \text{ cm}^3$.

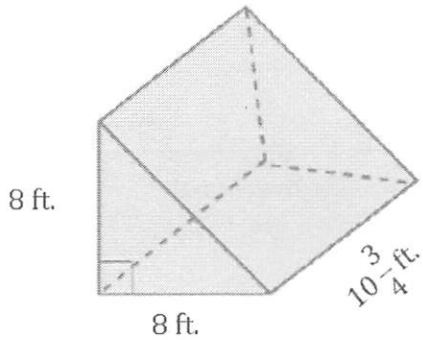


c.

$B = \frac{1}{2} bh_{\text{triangle}}$

$B = \frac{1}{2}(8 \text{ ft.})(8 \text{ ft.})$

$B = 32 \text{ ft}^2$

The base of the prism is a triangle, so I use the area formula for a triangle to calculate the area of the base.

$V = Bh_{\text{prism}}$

$V = 32 \text{ ft}^2 \times 10\frac{3}{4} \text{ ft.}$

$V = 32 \text{ ft}^2 \times \frac{43}{4} \text{ ft.}$

$V = 344 \text{ ft}^3$

The height of the prism is the distance between the two triangular bases.

*The volume of the solid is* $344 \text{ ft}^3$.

I can decompose the trapezoidal base into a rectangle and a triangle. I could also choose to use the area formula for a trapezoid, which is $A = \frac{1}{2}(b_1 + b_2)h$.

d.

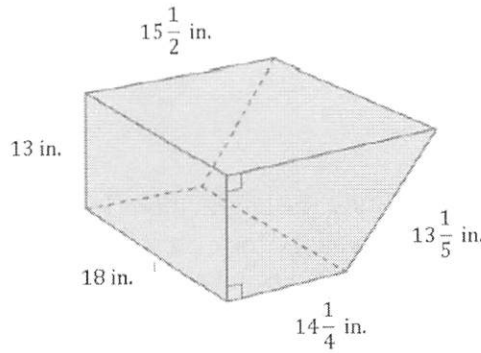


$B = A_{\text{rectangle}} + A_{\text{triangle}}$

$B = \left(14\frac{1}{4} \text{ in.} \times 13 \text{ in.}\right) + \left(\frac{1}{2} \times 1\frac{1}{4} \text{ in.} \times 13 \text{ in.}\right)$

$B = \left(\frac{57}{4} \text{ in.} \times 13 \text{ in.}\right) + \left(\frac{1}{2} \times \frac{5}{4} \text{ in.} \times 13 \text{ in.}\right)$

$B = \frac{741}{4} \text{ in}^2 + \frac{65}{8} \text{ in}^2$

$B = \frac{1482}{8} \text{ in}^2 + \frac{65}{8} \text{ in}^2$

$B = \frac{1547}{8} \text{ in}^2$

I wait to convert this fraction into a mixed number until I am done with all of my calculations.

$V = Bh$

$V = \frac{1547}{8} \text{ in}^2 \times 18 \text{ in.}$

$V = 3,480\frac{3}{4} \text{ in}^3$

*The volume of this solid is* $3,480\frac{3}{4} \text{ in}^3$.

2. Let $l$ represent the length, $w$ the width, and $h$ the height of a right rectangular prism. Find the volume of the prism when $l = 12$ m, $w = \frac{5}{6}$ m, $h = 6\frac{1}{10}$ m.

$V = Bh$

$V = lwh$

$V = 12 \text{ m} \times \frac{5}{6} \text{ m} \times 6\frac{1}{10} \text{ m}$

$V = 10 \text{ m}^2 \times 6\frac{1}{10} \text{ m}$

$V = 61 \text{ m}^3$

I multiply the length and width to calculate the area of the base of a right rectangular prism. Therefore, I can substitute $lw$ in for $B$ in the volume formula.

3. Find the length of the edge indicated in the diagram if the volume of the prism is $432 \text{ cm}^3$.

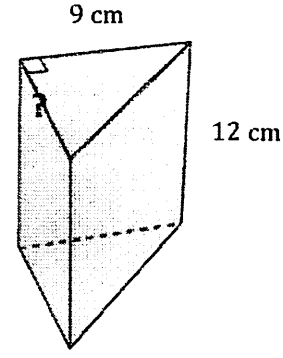


***Let h represent the number of centimeters in the height of the triangular base of the prism.***

$$V = Bh$$
$$V = \left(\frac{1}{2} b h_{\text{triangle}}\right)(h_{\text{prism}})$$
$$432 \text{ cm}^3 = \left(\frac{1}{2} \cdot 9 \text{ cm} \cdot h\right)(12 \text{ cm})$$
$$432 \text{ cm}^3 = \frac{1}{2} \cdot 108 \text{ cm}^2 \cdot h$$
$$432 \text{ cm}^3 = 54 \text{ cm}^2 \cdot h$$
$$\left(\frac{1}{54 \text{ cm}^2}\right)(432 \text{ cm}^3) = \left(\frac{1}{54 \text{ cm}^2}\right) 54 \text{ cm}^2 \cdot h$$
$$8 \text{ cm} = h$$

I substitute the information I know into the volume formula and then use my knowledge of solving equations to determine the height of the prism.

***The height of the triangle is*** $8 \text{ cm}$.

4. Given a right rectangular prism with a volume of $36\ \text{in}^3$, a length of $8$ in., and a width of $3$ in., find the height of the prism.

*Let $h$ represent the number of inches in the height of the prism.*

$$V = lwh$$
$$36\ \text{in}^3 = 8\ \text{in.} \times 3\ \text{in.} \times h$$
$$36\ \text{in}^3 = 24\ \text{in}^2 \times h$$
$$\left(\frac{1}{24\ \text{in}^2}\right) 36\ \text{in}^3 = \left(\frac{1}{24\ \text{in}^2}\right) \times 24\ \text{in}^2 \times h$$
$$1\frac{1}{2}\ \text{in.} = h$$

I can use $V = lwh$ because the bases of the prism are rectangles. Using this formula, I can use my knowledge of solving equations to determine the height.

*The height of the prism is $1\frac{1}{2}$ in.*

# G7-M3-Lesson 24: The Volume of a Right Prism

If I did not know the inside dimensions, I would not be able to calculate the correct volume because the thickness of the walls has an impact on the volume when using dimensions on the outside of the tank.

1. Whitney bought an aquarium that is a right rectangular prism. The inside dimensions of the aquarium are 75 cm long, by 50 cm, by 70 cm deep. She plans to put water in the aquarium before purchasing any pet fish. How many liters of water does she need to put in the aquarium so that the water level is 8 cm from the top?

$V = lwh$

$V = 75 \text{ cm} \times 50 \text{ cm} \times 62 \text{ cm}$

The height of the water is only 62 cm because the water level is 8 cm below the top of the aquarium.

$V = 232,500 \text{ cm}^3$

$232,500 \text{ cm}^3 = 232.5\ L$

I know that there are 1,000 cubic centimeters in 1 liter.

*The volume of the water needed is* $232.5\ L$.

2. The insides of two different water tanks are shown below. Which tank has the smaller capacity? Justify your answer.

$V_1 = Bh$

$V_1 = (9 \text{ ft.} \times 2.8 \text{ ft.}) \times 4 \text{ ft.}$

$V_1 = 25.2 \text{ ft}^2 \times 4 \text{ ft.}$

$V_1 = 100.8 \text{ ft}^3$

I need to determine the volume of each tank in order to determine which one has a smaller capacity.

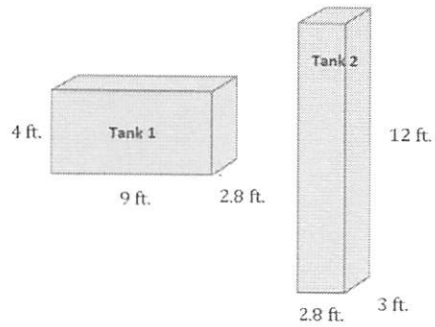


$V_2 = (2.8 \text{ ft.} \times 3 \text{ ft.}) \times 12 \text{ ft.}$

$V_2 = 8.4 \text{ ft}^2 \times 12 \text{ ft.}$

$V_2 = 100.8 \text{ ft}^3$

*Each prism has a volume of* $100.8 \text{ ft}^3$*, which means that both tanks have the same capacity so neither one has a smaller capacity.*

3. The inside base of a right rectangular prism-shaped tank is 42 cm by 59 cm. What is the minimum height inside the tank if the volume of the liquid in the tank is 74.34 L?

In order to find the height, all the known dimensions must have the same units. I know 74.34 L is equivalent to 74,340 $\text{cm}^3$.

$$V = Bh$$
$$74,340\ \text{cm}^3 = (42\ \text{cm} \times 59\ \text{cm}) \times h$$
$$74,340\ \text{cm}^3 = 2,478\ \text{cm}^2 \times h$$
$$\left(\frac{1}{2,478\ \text{cm}^2}\right)(74,340\ \text{cm}^3) = \left(\frac{1}{2,478\ \text{cm}^2}\right)(2,478\ \text{cm}^2 \times h)$$
$$30\ \text{cm} = h$$

*The minimum height of the tank is* 30 cm.

4. The inside of a right rectangular prism-shaped tank has a base that is 18 cm by 30 cm and a height of 42 cm. The tank is filled to its capacity with water, and then 4.32 L of water was removed. How far did the water level drop?

$$V = Bh$$
$$V = (18\ \text{cm} \times 30\ \text{cm}) \times 42\ \text{cm}$$
$$V = 540\ \text{cm}^2 \times 42\ \text{cm}$$
$$V = 22,680\ \text{cm}^3$$

I need to determine the maximum capacity of the tank before I can worry about letting water out.

*The capacity of the tank is* $22,680\ \text{cm}^3$ *or* $22.68\ L$.

$22.68\ L - 4.32\ L = 18.36\ L$

When 4.32 L are removed from the tank, 18.36 L, or 18,360 $\text{cm}^3$, are left.

I can use the new volume of the water to determine the height of the water left in the tank.

$$V = Bh$$
$$18,360\ \text{cm}^3 = (18\ \text{cm} \times 30\ \text{cm}) \times h$$
$$18,360\ \text{cm}^3 = 540\ \text{cm}^2 \times h$$
$$\left(\frac{1}{540\ \text{cm}^2}\right)(18,360\ \text{cm}^3) = \left(\frac{1}{540\ \text{cm}^2}\right)(540\ \text{cm}^2 \times h)$$
$$34\ \text{cm} = h$$

$42\ \text{cm} - 34\ \text{cm} = 8\ \text{cm}$

*The water level has dropped* 8 cm.

I know the original height of the water was 42 cm. After some water was removed, the height is now 34 cm.

5. A tank in the shape of a right rectangular prism has inside dimensions of $35\frac{1}{2}$ cm long and $42\frac{1}{5}$ cm wide. The tank is $\frac{3}{4}$ full of water. It contains 89.886 L of water. Find the height of the container.

$$V = lwh$$
$$89,886 \text{ cm}^3 = \left(35\frac{1}{2} \text{ cm} \times 42\frac{1}{5}\text{cm}\right) \times h$$
$$89,886 \text{ cm}^3 = 1,498.1 \text{ cm}^2 \times h$$
$$\left(\frac{1}{1,498.1 \text{ cm}^2}\right)(89,886 \text{ cm}^3) = \left(\frac{1}{1,498.1 \text{ cm}^2}\right)(1,498.1 \text{ cm}^2 \times h)$$
$$60 \text{ cm} = h$$

If I determine the height of the water, I can use this information to determine the height of the tank.

*Let $d$ represent the depth of the container in centimeters.*

$$60 \text{ cm} = \frac{3}{4} \cdot d$$
$$\left(\frac{4}{3}\right)(60 \text{ cm}) = \left(\frac{4}{3}\right)\left(\frac{3}{4} \cdot d\right)$$
$$80 \text{ cm} = \text{d}$$

I know the water only fills $\frac{3}{4}$ of the tank, so the height of the tank should be larger than the height of the water.

*The depth of the container is 80 cm.*

# G7-M3-Lesson 25: Volume and Surface Area

1. The dimensions of two right rectangular fish tanks are listed below. Find the volume in cubic centimeters, the capacity in liters, and the surface area in square centimeters for each tank. What do you observe about the change in volume compared with the change in surface area between the two tanks?

| Tank Size | Length (cm) | Width (cm) | Height (cm) |
|---|---|---|---|
| Small | 20 | 14 | 11 |
| Large | 32 | 20 | 21 |

$V_s = 20 \text{ cm} \times 14 \text{ cm} \times 11 \text{ cm} = 3,080 \text{ cm}^3$

$V_l = 32 \text{ cm} \times 20 \text{ cm} \times 21 \text{ cm} = 13,440 \text{ cm}^3$

Once I know the volume, I can calculate the capacity by converting the cubic centimeters into liters.

$SA_s = 2(20 \text{ cm} \times 14 \text{ cm}) + 2(14 \text{ cm} \times 11 \text{ cm}) + 2(20 \text{ cm} \times 11\text{cm})$
$SA_s = 2(280 \text{ cm}^2) + 2(154 \text{ cm}^2) + 2(220 \text{ cm}^2)$
$SA_s = 560 \text{ cm}^2 + 308 \text{ cm}^2 + 440 \text{ cm}^2$
$SA_s = 1,308 \text{ cm}^2$

I remember how to calculate the surface area from Lessons 21 and 22.

$SA_l = 2(32 \text{ cm} \times 20 \text{ cm}) + 2(20 \text{ cm} \times 21 \text{ cm}) + 2(32 \text{ cm} \times 21 \text{ cm})$
$SA_l = 2(640 \text{ cm}^2) + 2(420 \text{ cm}^2) + 2(672 \text{ cm}^2)$
$SA_l = 1,280 \text{ cm}^2 + 840 \text{ cm}^2 + 1,344 \text{ cm}^2$
$SA_l = 3,464 \text{ cm}^2$

| Tank Size | Volume ($\text{cm}^3$) | Capacity (L) | Surface Area ($\text{cm}^2$) |
|---|---|---|---|
| Small | 3,080 | 3.08 | 1,308 |
| Large | 13,440 | 13.44 | 3,464 |

*The volume of the large tank is about four times the volume of the small tank. However, the surface area of the large tank is only about two and half times the surface area of the small tank.*

2. A rectangular container 30 cm long by 20 cm wide contains 12 L of water.

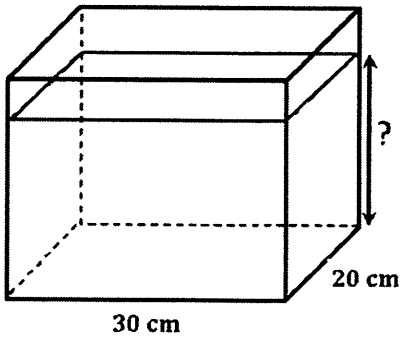


a. Find the height of the water level in the container.

$12\ L = 12{,}000\ \text{cm}^3$

I have to convert the capacity of the water to $\text{cm}^3$ before finding the height of the water.

$$12{,}000\ \text{cm}^3 = 30\ \text{cm} \times 20\ \text{cm} \times h$$
$$12{,}000\ \text{cm}^3 = 600\ \text{cm}^2 \times h$$
$$\left(\frac{1}{600\ \text{cm}^2}\right)(12{,}000\ \text{cm}^3) = \left(\frac{1}{600\ \text{cm}^2}\right)(600\ \text{cm}^2 \times h)$$
$$20\ \text{cm} = h$$

***The height of the water is 20 cm.***

b. If the height of the container is 24 cm, how many more liters of water would it take to completely fill the container?

$$V = 30\ \text{cm} \times 20\ \text{cm} \times 24\ \text{cm} = 14{,}400\ \text{cm}^3$$

The total capacity of the container is 14.4 L.

I need to find the difference between the total capacity and the capacity of the water to determine the amount of water needed to fill the container.

$$14.4\ L - 12\ L = 2.4\ L$$

***To completely fill the tank, 2.4 L of water would have to be added to the tank.***





EUREKA MATH

c. What percentage of the tank is filled when it contains 12 L of water?

$$\frac{12\ L}{14.4\ L} = 0.8\overline{3} = 83\frac{1}{3}\%$$

I divide the part by the whole in order to find the percent.

3. Two tanks are shown below. Both are filled to capacity, but the owner decides to drain them. Tank 1 is draining at a rate of 6 liters per minute. Tank 2 is draining at a rate of 7 liters per minute. Which tank empties first?

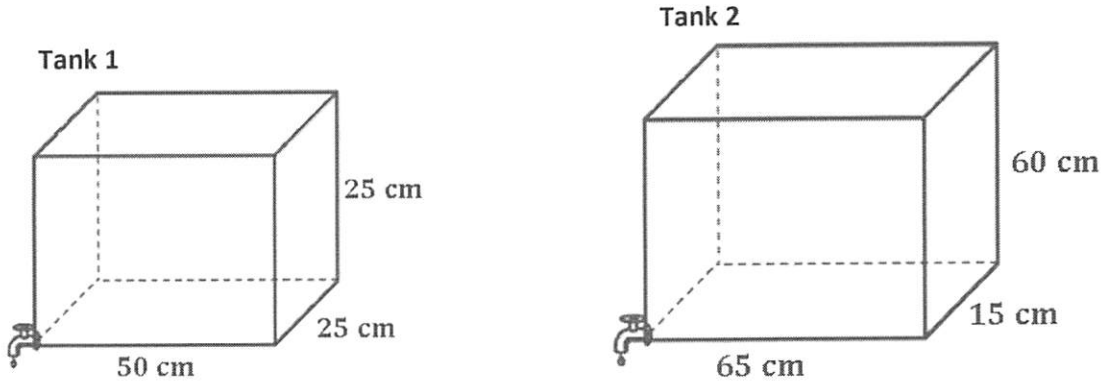


*Tank 1 Volume:* $50\text{ cm} \times 25\text{ cm} \times 25\text{ cm} = 31{,}250\text{ cm}^3$

*Tank 2 Volume:* $65\text{ cm} \times 15\text{ cm} \times 60\text{ cm} = 58{,}500\text{ cm}^3$

Before finding the time it takes to drain the tank, I need to calculate the capacity of each tank.

*Tank 1 Capacity:* $31.25\ L$

*Tank 2 Capacity:* $58.5\ L$

*Time to drain Tank 1:* $\frac{31.25\ L}{6\frac{L}{\text{min}}} \approx 5.2\text{ min.}$

*Time to drain Tank 2:* $\frac{58.5\ L}{7\frac{L}{\text{min}}} \approx 8.4\text{ min.}$

I divide the capacity of each tank by the rate at which the tank drains to determine how long it takes to drain each tank.

*Tank 1 will be empty first because it will drain in about* $5.2$ *minutes, and Tank 2 drains in about* $8.4$ *minutes.*

4. Two tanks have equal volumes. The tops are open. The owner wants to cover one tank with a glass top. The cost of glass is $\$0.08$ per square inch. Which tank would be less expensive to cover? How much less?

   Dimensions of Tank 1: $14$ in. long by $6$ in. wide by $9$ in. high

   Dimensions of Tank 2: $12$ in. long by $9$ in. wide by $7$ in. high

I need to know the surface area of the top of each tank before I can determine how much it costs for the glass.

$SA_1 = 14 \text{ in.} \times 6 \text{ in.} = 84 \text{ in}^2$

$SA_2 = 12 \text{ in.} \times 9 \text{ in.} = 108 \text{ in}^2$

To determine the total cost, I multiply the cost of the glass by the number of square inches needed for each top.

*Tank 1 Cost:* $\frac{\$0.08}{\text{in}^2} \cdot 84 \text{ in}^2 = \$6.72$

*Tank 2 Cost:* $\frac{\$0.08}{\text{in}^2} \cdot 108 \text{ in}^2 = \$8.64$

*The second tank is* $\$1.92$ *cheaper to cover than the first tank.*

# G7-M3-Lesson 26: Volume and Surface Area

1. A child's toy is constructed by cutting a right triangular prism out of a right rectangular prism. The image is not drawn to scale.

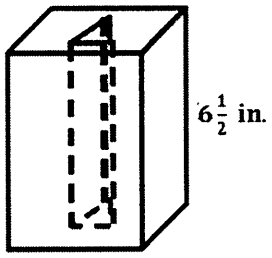


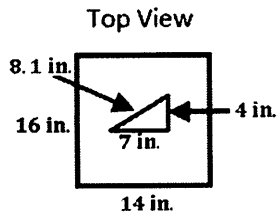


a. Calculate the volume of the right rectangular prism.

$V = 14 \text{ in.} \times 16 \text{ in.} \times 6\frac{1}{2} \text{ in.} = 1,456 \text{ in}^3$

I use the area formula for a triangle to calculate the area of the base of the triangular prism.

b. Calculate the volume of the triangular prism.

$V = \frac{1}{2}(7 \text{ in.} \times 4 \text{ in.}) \times 6\frac{1}{2} \text{ in.} = 14 \text{ in}^2 \times 6\frac{1}{2} \text{ in.} = 91 \text{ in}^3$

c. Calculate the volume of the material remaining in the rectangular prism.

$V = 1,456 \text{ in}^3 - 91 \text{ in}^3 = 1,365 \text{ in}^3$

The remaining volume is the difference between the volumes of the rectangular prism and the triangular prism.

d. What is the largest number of triangular prisms that can be cut from the rectangular prism?

$\frac{1,456 \text{ in}^3}{91 \text{ in}^3} = 16$

I calculate the quotient of the two volumes to determine how many triangular prisms will fit inside the rectangular prism.

e. What is the surface area of the triangular prism (assume there is no top or bottom)?

$SA = 7 \text{ in.} \times 6\frac{1}{2} \text{ in.} + 4 \text{ in.} \times 6\frac{1}{2} \text{ in.} + 8.1 \text{ in.} \times 6\frac{1}{2} \text{ in.}$

$SA = 45.5 \text{ in}^2 + 26 \text{ in}^2 + 52.65 \text{ in}^2$

$SA = 124.15 \text{ in}^2$

I only have to find the area of the three faces of the triangle since there is no top or bottom.

2. A landscape designer is constructing a flower bed in the shape of a right trapezoidal prism. He needs to run three identical square prisms through the bed for drainage.

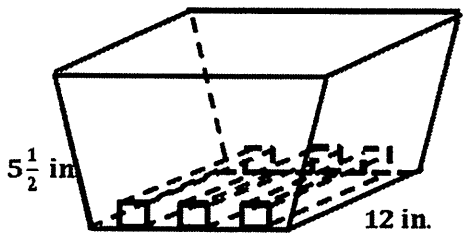


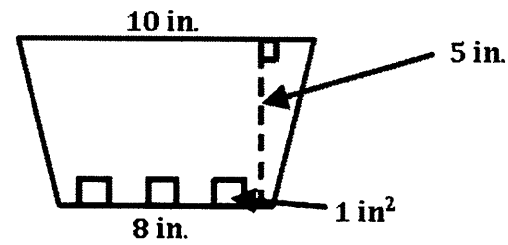


a. What is the volume of the bed without the drainage pipes?

$$V = \frac{1}{2}(8 \text{ in.} + 10 \text{ in.}) \times 5 \text{ in.} \times 12 \text{ in.} = 9 \text{ in.} \times 5 \text{ in.} \times 12 \text{ in.} = 540 \text{ in}^3$$

The base is a trapezoid. I know the area formula for a trapezoid is $A = \frac{1}{2}(b_1 + b_2) \times h$.

b. What is the total volume of the drainage pipes?

$$V = 3(1 \text{ in}^2 \times 12 \text{ in.}) = 3(12 \text{ in}^3) = 36 \text{ in}^3$$

c. What is the volume of the soil if the planter is filled to $\frac{3}{5}$ of its total capacity with the pipes in place?

$$V = \frac{3}{5}(540 \text{ in}^3) - 36 \text{ in}^3 = 288 \text{ in}^3$$

I know the volume of the soil is $\frac{3}{5}$ of the total volume minus the volume of the drainage pipes.

d. What is the height of the soil? If necessary, round to the nearest tenth.

$$288 \text{ in}^3 = \frac{1}{2}(8 \text{ in.} + 10 \text{ in.}) \times h \times 12 \text{ in.}$$

$$288 \text{ in}^3 = 108 \text{ in}^2 \times h$$

$$\left(\frac{1}{108 \text{ in}^2}\right)(288 \text{ in}^3) = \left(\frac{1}{108 \text{ in}^2}\right)(108 \text{ in}^2 \times h)$$

$$2.67 \text{ in.} \approx h$$

*The soil has a height of about* 2.67 in.





EUREKA MATH